BAYLINER®

Classic Runabouts

Owner's Manual *Supplement*

Engine Serial Number: _____

Hull Identification Number:_____

Hull Identification Number

- The Hull Identification Number (HIN) is located on the starboard hullside just forward of the transom.
- Record the HIN (and the engine serial numbers) in the space provided above.
- Include the HIN with any correspondence or orders.

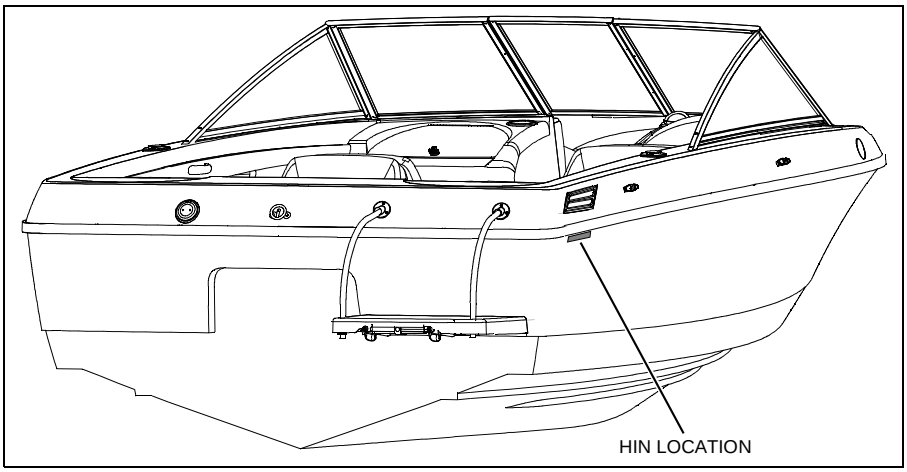

© 2005 Bayliner Technical Publications. All rights reserved.

No part of this publication may be reproduced, stored in any retrieval system, or transmitted in any form by any means, electronic, mechanical, photocopying, recording or otherwise, without prior written permission of Bayliner.

Printed in the United States of America.

General Notes

The material in this document is for information only and is subject to change without notice. While reasonable efforts have been made in the preparation of this document to assure its accuracy, Bayliner assumes no liability resulting from errors or omissions in this document, or from the use of information contained herein.

Due to our commitment to product improvement, Bayliner reserves the right to make changes in the product design, specifications, and equipment at any time without notice or obligation. Illustrations and/or photos may show optional equipment.

All Bayliner products meet or exceed USCG (United States Coast Guard) and/or NMMA (National Marine Manufacturer's Association) construction standards. Manufactured with 1,1,1 Trichloroethane, a substance which harms public health and environment during the manufacturing process by destroying ozone in the upper atmosphere.

Proprietary Rights

This document discloses subject matter in which Bayliner has proprietary rights. The information and design disclosed herein were originated by and are the property of Bayliner. Neither receipt nor possession thereof confers or transfers any right to reproduce, copy, alter or disclose the document or any part thereof, any information contained therein, or to construct boats or any item from it, except by written permission from or written agreement with Bayliner. This document is to be returned upon request to Bayliner.

Part Number
1810222

Contents

Chapter 1: Welcome Aboard!

Dealer Service **1**

Warranty Information **1**

Boating Experience **1**

Engine & Accessory Guidelines **2**
- *Engine & Accessory Literature* ***2***
- *Propeller* ***2***

Qualified Maintenance **3**

Special Care for Moored Boats **3**

Safety Standards **4**

Carbon Monoxide (CO) **5**
- *CO Facts* ***5***
- *Factors that Increase the Effects of CO Poisoning* ***5***
- *Where & How CO Can Accumulate* ***6***
- *How to Protect Yourself & Others From CO* ***6***
- *CO Checklists* ***7***
- *CO Monitor (192 & 210 Only)* ***7***
- *More Information* ***8***

Chapter 2: Product Specifications

Dimensions & Tank Capacities **9**
- *192* ***9***
- *194* ***9***
- *195* ***9***
- *210* ***9***
- *215* ***9***

Chapter 3: Locations

Exterior Views **10**
- *192, 194 & 195 Exterior Hull Views* ***10***
- *210 & 215 Exterior Hull Views* ***11***
- *192 Deck View* ***12***
- *194 Deck View* ***13***
- *195 Deck View* ***14***
- *210 Deck View* ***15***
- *215 Deck Views* ***16***
- *192, 194 & 195 Helm View* ***17***
- *210 & 215 Helm View* ***17***

Component Locations **18**

Chapter 4: Propulsion & Related Systems

Engine **29**

Bilge Blower System **29**

Fuel System **30**
- *Fuel Fill & Vent* ***30***
- *Gas Engine Fuel Filters* ***30***
- *Fuel Filter/Water Separator (Diesel Engine Only)* ***31***
- *Anti-siphon Valve (Gas Engine Only)* ***31***

Quick Oil Drain System **32**

Chapter 5: Controls & Gauges

Steering **33**

Shift/Throttle Controls **33**

Power Trim & Tilt **33**

Gauges **34**
- *Cleaning the Gauges* ***34***
- *Gauge Fogging* ***34***
- *Radio Transmission Interference* ***34***
- *Fuel Gauge* ***34***
- *Compass (If Equipped)* ***34***
- *Depth Finder (If Equipped)* ***34***

Chapter 6: Plumbing

Bilge Pump **35**
- *Bilge Pump Testing* ***35***
- *Autofloat Switch* ***36***

Livewell System (194 Only) **37**

Portable Toilet **38**

Chapter 7: Deck Equipment

Cleats & Bow/Stern Eyes **39**

Ski-Tow Ring **39**

Canvas & Vinyl Tops & Enclosures **40**

192 Bimini Top (If Equipped) ***40***
192 Aft Bimini Top (If Equipped) ***41***
194 & 195 Bimini Top (If Equipped) ***41***
210 & 215 Convertible Top ***42***
215 Bimini Top (If Equipped) ***42***
Vinyl Curtains (If Equipped) ***43***
Canvas Care ***45***
Clear Vinyl Care ***46***

Chapter 8: Entertainment Systems

Audio Equipment **47**

Chapter 9: Convertible Seats, Beds, & Tables

Sleeper Seats **48**

Operating Positions ***48***
Lounge Positions ***48***

Jump Seat To Sunlounge Conversion **49**

Chapter 10: Lights

Care & Maintenance **51**

Interior & Exterior Lights **51**

Navigation Lights **51**

Spotlight (194 Only) (If Equipped) **51**

Chapter 11: Electrical System

12-Volt DC System **53**

Battery(s) ***53***
Battery Switch (If Equipped with Two Batteries) ***53***
Battery Switch Positions ***53***
Fuses ***54***
12-Volt DC Accessory Outlets ***55***
Alternator ***55***

Electrical Routings **56**

12-Volt DC Hull Harness - 192 , 194 & 195 ***56***
12-Volt DC Hull Harness - 210 & 215 ***56***
12-Volt DC Deck Harness - 192 ***57***
12-Volt DC Deck Harness - 194 & 195 ***57***
12-Volt DC Deck Harness - 210 ***58***
12-Volt DC Deck Harness - 215 ***58***
Battery Cable Routings - 192 , 194 & 195 ***59***
Battery Cable Routings - 210 & 215 ***59***

Wiring Diagrams **60**

192 ***60***
194 & 195 ***61***
210 & 215 ***62***

Important Records 63

Float Plan 64

Hazard Boxes & Symbols

The hazard boxes and symbols shown below are used throughout this supplement to call attention to potentially dangerous situations which could lead to either personal injury or product damage. Read ***all*** warnings carefully and follow ***all*** safety instructions.

⚠ DANGER!

This box alerts you to immediate hazards which *WILL* cause severe personal injury or death if the warning is ignored.

⚠ WARNING!

This box alerts you to hazards or unsafe practices which *COULD* result in severe personal injury or death if the warning is ignored.

⚠ CAUTION

This box alerts you to hazards or unsafe practices which *COULD* result in minor personal injury or cause product or property damage if the warning is ignored.

NOTICE

This box calls attention to installation, operation or maintenance information, which is important to proper operation but is not hazard related.

FIRE HAZARD!

EXPLOSION HAZARD!

NO OPEN FLAME!

ELECTRICAL HAZARD!

HOT HAZARD!

FALLING HAZARD!

ROTATING PROPELLER HAZARD!

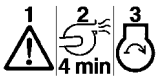

RUN BILGE BLOWERS FOR 4 MINUTES!

CO POISONING HAZARD!

Chapter 1: Welcome Aboard!

- This *Owner's Manual Supplement* provides information about your boat that is ***not*** covered in the *Sport Boat Owner's Manual*.
- ***Before*** using your boat, study this *Owner's Manual Supplement*, the *Sport Boat Owner's Manual*, and ***all*** engine and accessory literature carefully.
- Keep this *Owner's Manual Supplement* and the *Sport Boat Owner's Manual* on your boat in a secure, yet readily available place.

Dealer Service

- Your dealer is your key to service.
- Ask your dealer to explain ***all*** systems ***before*** taking delivery of your boat.
- Contact your dealer if you have any problems with your new boat.
- If your dealer cannot help, call our customer service hotline: 360-435-8957 or send us a FAX: 360-403-4235.
- Buy replacement parts from any authorized Bayliner dealer.

Warranty Information

- Bayliner offers a Limited Warranty on each new Bayliner purchased through an authorized Bayliner dealer.
- A copy of the Limited Warranty was included in your owner's packet.
- If you did not get a copy of the Limited Warranty, please contact your Bayliner dealer or call 360-435-8957 for a copy.

Boating Experience

⚠ WARNING!

CONTROL HAZARD!

A qualified operator *MUST* be in control of your boat at *ALL* times. Do *NOT* operate your boat while under the influence of alcohol or drugs.

If this is your first boat or if you are changing to a type of boat you are ***not*** familiar with, for your own comfort and safety, get handling and operating experience ***before*** assuming command of your boat.

Take one of the boating safety classes offered by the U.S. Power Squadrons or the U.S. Coast Guard Auxiliary. For more course information, including dates and locations of upcoming classes, contact the organizations directly:

- U.S. Power Squadrons: 1-888-FOR-USPS (1-888-367-8777) or on the Internet at: http://www.usps.org
- In Canada, for the CPS courses call 1-888-CPS-BOAT.
- U.S. Coast Guard Auxiliary: 1-800-368-5647 or on the Internet at: http://www.cgaux.org

Outside the United States, your selling dealer, national sailing federation, or local boat club can advise you of local sea schools or competent instructors.

Engine & Accessory Guidelines

NOTICE

When storing your boat, please refer to your engine's operation and maintenance manuals.

NOTICE

Certain modifications to your boat *WILL* result in cancellation of your warranty protection. *ALWAYS* check with your dealer *BEFORE* making any modifications to your boat.

- Your boat's engine and accessories were selected to provide optimum performance and service.
- Installing a different engine or other accessories may cause unwanted handling characteristics.
- Should you choose to install a different engine or accessories that will affect your boat's running trim, have an experienced marine technician perform a safety inspection and handling test ***before*** operating your boat again.

Engine & Accessory Literature

- The engine and accessories installed on your boat come with their own operation and maintenance manuals.
- Read these manuals ***before*** using the engine and accessories.
- Unless noted otherwise, ***all*** engine and accessory literature referred to in this *supplement* is included in your owner's packet.

Propeller

⚠ CAUTION

ENGINE DAMAGE HAZARD!

The factory standard propeller may not be the best for your particular boat and load conditions. Refer to the engine manual for engine RPM ratings. The engine should reach, but not exceed its full rated RPM when full-throttle is applied.

Immediately contact your local Bayliner dealer if:

- **The engine cannot reach its full rated RPM when full-throttle is applied, or;**
- **The engine exceeds its full rated RPM when full-throttle is applied.**

- Keep the propeller in good repair and at the correct pitch for your particular situation.
- A slightly bent or nicked propeller will adversely affect the performance of your boat.

Qualified Maintenance

⚠ WARNING!

To maintain the integrity and safety of your boat, allow *ONLY* qualified personnel to perform maintenance on, or change, in any way, the:

- **Steering system**
- **Propulsion system**
- **Engine control system**
- **Fuel system**
- **Environmental control system**
- **Electrical system**
- **Navigational system**

- Failure to maintain your boat's systems (listed in the warning above) as designed could violate the laws in your jurisdiction and could expose you and other people to the danger of bodily injury or accidental death.
- Follow the instructions provided in the *Sport Boat Owner's Manual*, this *supplement*, the engine owner's manual, and ***all*** accessory literature.

Special Care for Moored Boats

NOTICE

- **To help seal the hull bottom and reduce the chance of gel coat blistering while your boat is moored, apply an epoxy barrier coating.**
- **The barrier coating should be covered with several coats of anti-fouling paint.**
- **Many states regulate the chemical content of bottom paints in order to meet environmental standards. Check with your local dealer about recommended bottom paints, and about the laws in effect in your area.**

- Whether moored in saltwater or freshwater, your boat will collect marine growth on its hull bottom.
- This will detract from your boat's beauty, greatly affect its performance, and may damage the gel coat.
- Periodically haul your boat out of the water and scrub the hull bottom with a bristle brush and a solution of soap and water.

Safety Standards

⚠ DANGER!

FALLING and ROTATING PROPELLER HAZARD!

- ***NEVER* allow anyone to ride on parts of your boat *NOT* designed for such use.**
- **Sitting on seat backs, lounging on the forward deck, bow riding, gunwale riding or occupying the transom platform while underway is especially hazardous and *WILL* cause personal injury or death.**

⚠ DANGER!

FALLING, ROTATING PROPELLER and CARBON MONOXIDE POISONING HAZARD!

- ***NEVER* allow anyone to occupy, or hang from, the back deck or swim platform while the engine(s) are running.**
- **Teak surfing, dragging, or water skiing within 20 feet of a moving watercraft can be fatal.**

⚠ DANGER!

PERSONAL SAFETY HAZARD!

- ***ALWAYS* secure the anchor and other loose objects *BEFORE* getting underway.**
- **The anchor and other items that are *NOT* properly secured can come loose when your boat is moving and cause personal injury or death.**

⚠ WARNING!

A wide variety of components used on this vessel contain or emit chemicals known to the State of California to cause cancer and birth defects and other reproductive harm.

Examples Include:

- **Engine and generator exhaust**
- **Engine and generator fuel, and other liquids such as coolants and oil, especially used motor oil**
- **Cooking fuels**
- **Cleaners, paints, and substances used for vessel repair**
- **Waste materials that result from wear of vessel components**
- **Lead from battery terminals and from other sources such as ballast or fishing sinkers**

To Avoid Harm:

- **Keep away from engine, generator, and cooking fuel exhaust fumes.**
- **Wash exposed skin thoroughly with soap and water after handling the substances above.**

- Your boat's mechanical and electrical systems were designed to meet safety standards in effect at the time it was built.
- Some of these standards were mandated by law, and all of them were designed to insure your safety and the safety of other people, vessels and property.

Read this *supplement*, the *Sport Boat Owner's Manual*, and ***all*** accessory instructions for important safety standards and hazard information.

Carbon Monoxide (CO)

⚠ DANGER!

- **Carbon monoxide gas (CO) is colorless, odorless, tasteless, and extremely dangerous.**
- ***ALL* engines, generators, and fuel burning appliances produce CO as exhaust.**
- **Prolonged exposure to low concentrations or very quick exposure to high concentrations *WILL* cause *BRAIN DAMAGE* or *DEATH*.**
- **Teak surfing, dragging, or water skiing within 20 feet of a moving water-craft can be fatal.**

CO Facts

- CO poisoning causes a significant number of boating deaths each year.
- Called the "silent killer", CO is an extremely toxic, colorless, odorless and tasteless gas.
- CO can harm or even kill you inside or outside your boat.
- CO can affect you whether you're underway, moored, or anchored.
- CO symptoms are similar to seasickness or alcohol intoxication.
- CO can make you sick in seconds. In high enough concentrations, even a few breaths can be fatal.
- Breathing CO blocks the ability of your blood to carry oxygen.
- The effects are cumulative. Even low levels of exposure can result in injury or death.

Factors that Increase the Effects of CO Poisoning

- Age
- Smokers or people exposed to high concentrations of cigarette smoke
- Consumption of alcohol
- Lung disorders
- Heart problems
- Pregnancy

Where & How CO Can Accumulate

Stationary conditions that increase CO accumulations include:

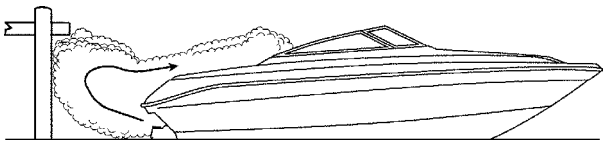

A. Using engine, generator, or other fuel burning device when boat is moored in a confined space.

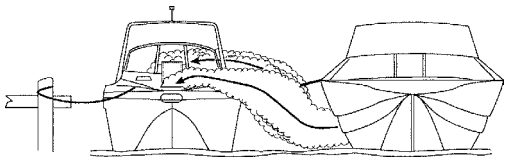

B. Mooring too close to another boat that is using its engine, generator, or other fuel burning device.

To correct stationary situations A and/or B:

- ***Close all*** windows, portlights and hatches.
- If possible, move your boat away from source of CO.

Running conditions that increase CO accumulations include:

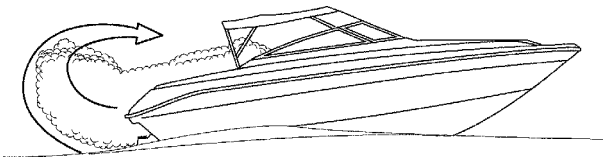

C. Running boat with trim angle of bow too high.

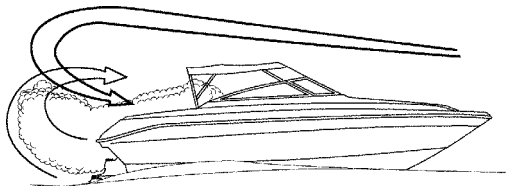

D. Running boat without through ventilation (station wagon effect).

To correct running situations C and/or D:

- Trim bow down.
- ***Open*** windows and canvas.
- When possible, run boat so that prevailing winds help dissipate exhaust.

How to Protect Yourself & Others From CO

- Know where and how CO may accumulate in and around your boat (see above).
- ***Always*** maintain fresh air circulation throughout your boat.
- Know where your engine and generator exhaust outlets are located and keep everyone away from these areas.
- ***Never*** sit on, or hang onto, the back deck or swim platform while the engine(s) is running.
- ***Never*** enter the areas under swim platforms where exhaust outlets are located.
- Although CO can be present without the smell of exhaust fumes, if exhaust fumes are detected on your boat, take ***immediate*** action to dissipate these fumes.
- Treat symptoms of seasickness as possible CO poisoning. Get the person into fresh air ***immediately***. Seek medical attention—unless you're sure it's ***not*** CO.
- Install and maintain CO monitors inside your boat. ***Never*** ignore any alarm. Replace monitors as recommended by the monitor manufacturer.
- Follow the checklists provided on the next page.
- Get a Vessel Safety Check.

For information on how to get a free VESSEL SAFETY CHECK, visit www.vesselsafetycheck.org or contact your local U.S. Coast Guard Auxiliary or United States Power Squadrons®.

- U.S. Coast Guard Auxiliary: 1-800-368-5647 or on the Internet at: http://www.cgaux.org
- U.S. Power Squadrons: 1-888-FOR-USPS (1-888-367-8777) or on the Internet at: http://www.usps.org

CO Checklists

Trip Checklist

- ❏ Make sure you know where the exhaust outlets are located on your boat.
- ❏ Educate ***all*** passengers about the symptoms of CO poisoning and where CO may accumulate.
- ❏ When docked, or rafted with another boat, be aware of exhaust emissions from the other boat.
- ❏ Listen for any change in exhaust sound, which could mean an exhaust component failure.
- ❏ Test the operation of each CO monitor by pressing the test button.

Monthly Checklist

- ❏ Make sure ***all*** exhaust clamps are in place and secure.
- ❏ Look for exhaust leaking from exhaust system components. Signs include rust and/or black streaking, water leaks, or corroded or cracked fittings.
- ❏ Inspect rubber exhaust hoses for burned, cracked, or deteriorated sections. ***All*** rubber hoses should be pliable and free of kinks.

Annual Checklist

Have a Qualified Marine Technician:

- ❏ Replace exhaust hoses if cracking, charring, or deterioration is found.
- ❏ Ensure that your engines and generators are properly tuned, and well maintained.
- ❏ Inspect each water pump impeller and the water pump housing. Replace if worn. Make sure cooling systems are in working condition.
- ❏ Inspect ***all*** metallic exhaust components for cracking, rusting, leaking, or loosening. Make sure they check the cylinder head gasket, exhaust manifold, water injection elbow, and the threaded adapter nipple between the manifold and the elbow.
- ❏ Clean, inspect, and confirm proper operation of the generator cooling water anti-siphon valve (if equipped).

CO Monitor (192 & 210 Only)

NOTICE

The stereo memory and CO monitor place a small, but constant drain on the battery.

- Do ***not*** disconnect the CO monitor.
- Read the manufacturer's instructions for your CO monitor. **If you did not get the manufacturer's instructions, call (800) 383-0269 and they will be mailed to you.**

If your boat is ***not*** equipped with a CO monitor, consider purchasing one from your dealer or marine supply store.

More Information

For more information about how you can prevent carbon monoxide poisoning on recreational boats and other ways to boat more safely, contact:

United States Coast Guard
Office of Boating Safety (G-OPB-3)
2100 Second Street SW
Washington, DC 20593
www.uscgboating.org
1-800-368-5647

National Marine Manufacturers Association (NMMA)
200 East Randolph Drive
Suite 5100
Chicago, IL 60601-9301
www.nmma.org
312-946-6200

American Boat & Yacht Council, Inc. (ABYC)
3069 Solomon's Island Road
Edgewater, MD 21037-1416
www.abycinc.org
410-956-1050

For information on how to get a free VESSEL SAFETY CHECK, visit www.vesselsafetycheck.org or contact your local U.S. Coast Guard Auxiliary or United States Power Squadrons®.

- U.S. Coast Guard Auxiliary: 1-800-368-5647 or on the Internet at: http://www.cgaux.org
- U.S. Power Squadrons: 1-888-FOR-USPS (1-888-367-8777) or on the Internet at: http://www.usps.org

Chapter 2: Product Specifications

Dimensions & Tank Capacities

192

Overall Length	Length Rigged	Bridge Clearance	Beam	Draft (Hull)	Draft (Maximum)	Fuel Capacity
19' 4"	21' 1"	7' 6'	7' 11'	1' 6'	2' 11'	23 Gallons

194

Overall Length	Length Rigged	Bridge Clearance	Beam	Draft (Hull)	Draft (Maximum)	Fuel Capacity
18' 9"	20' 8"	7' 0"	7' 7"	1' 5"	2' 9"	23 Gallons

195

Overall Length	Length Rigged	Bridge Clearance	Beam	Draft (Hull)	Draft (Maximum)	Fuel Capacity
18' 9"	20' 8"	7' 0"	7' 7"	1' 5"	2' 9"	23 Gallons

210

Overall Length	Length Rigged	Bridge Clearance	Beam	Draft (Hull)	Draft (Maximum)	Fuel Capacity
20' 9"	22' 8"	4' 6"	8' 0"	1' 7"	3' 0"	37 Gallons

215

Overall Length	Length Rigged	Bridge Clearance	Beam	Draft (Hull)	Draft (Maximum)	Fuel Capacity
20' 9"	22' 5"	4' 3"	8' 1"	1' 6"	2' 11"	37 Gallons

Chapter 3: Locations

Exterior Views

192, 194 & 195 Exterior Hull Views

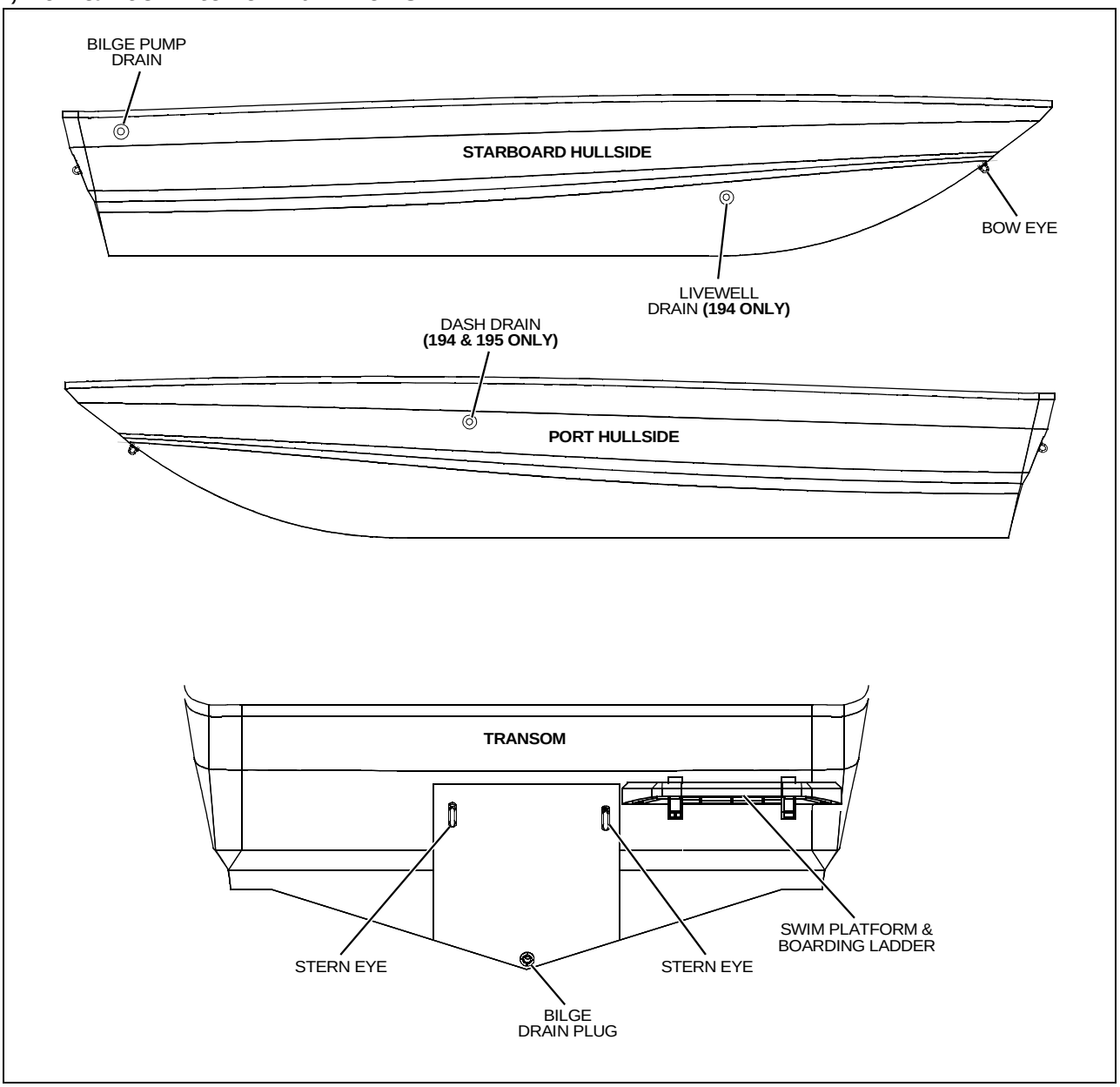

210 & 215 Exterior Hull Views

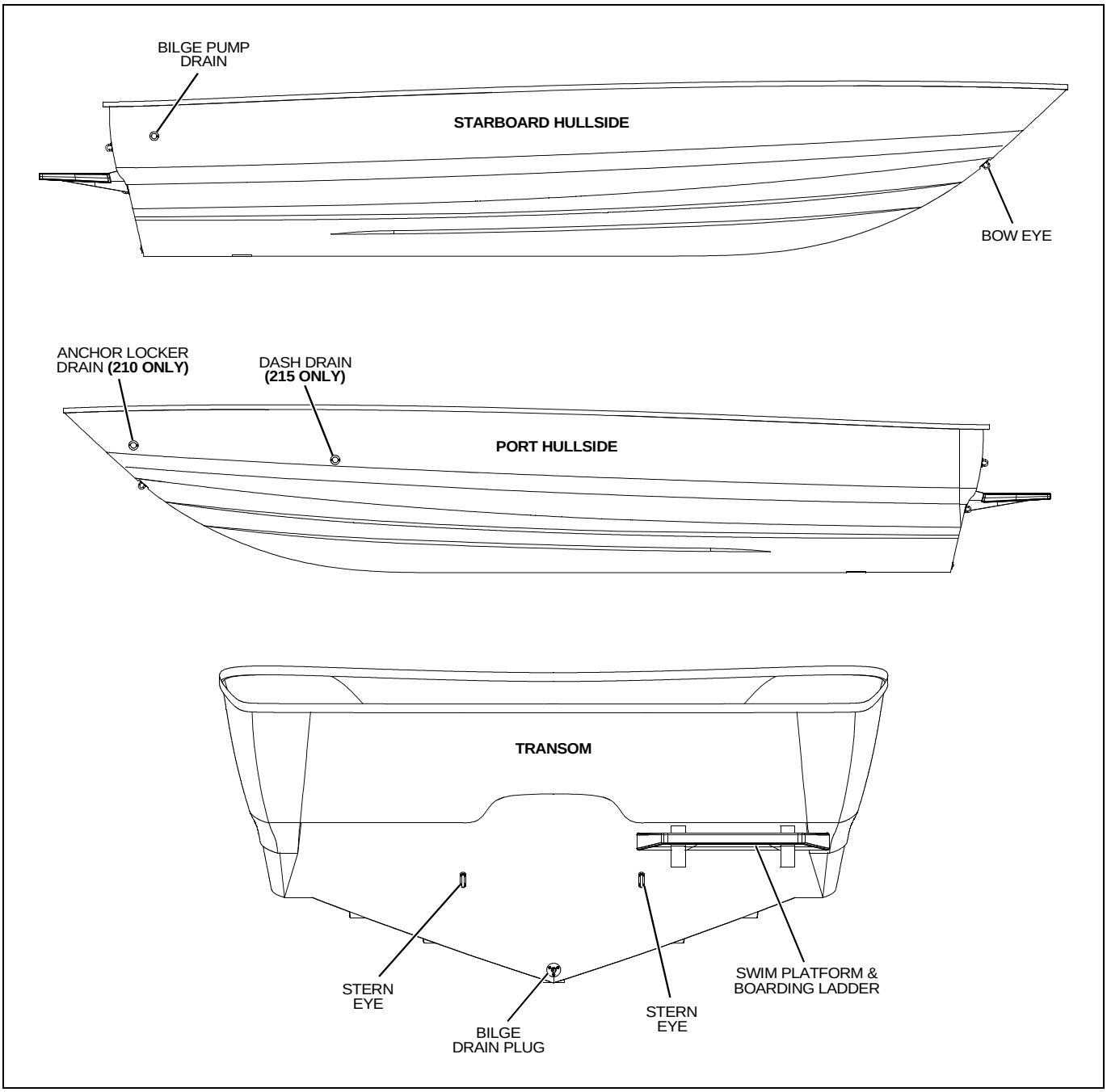

192 Deck View

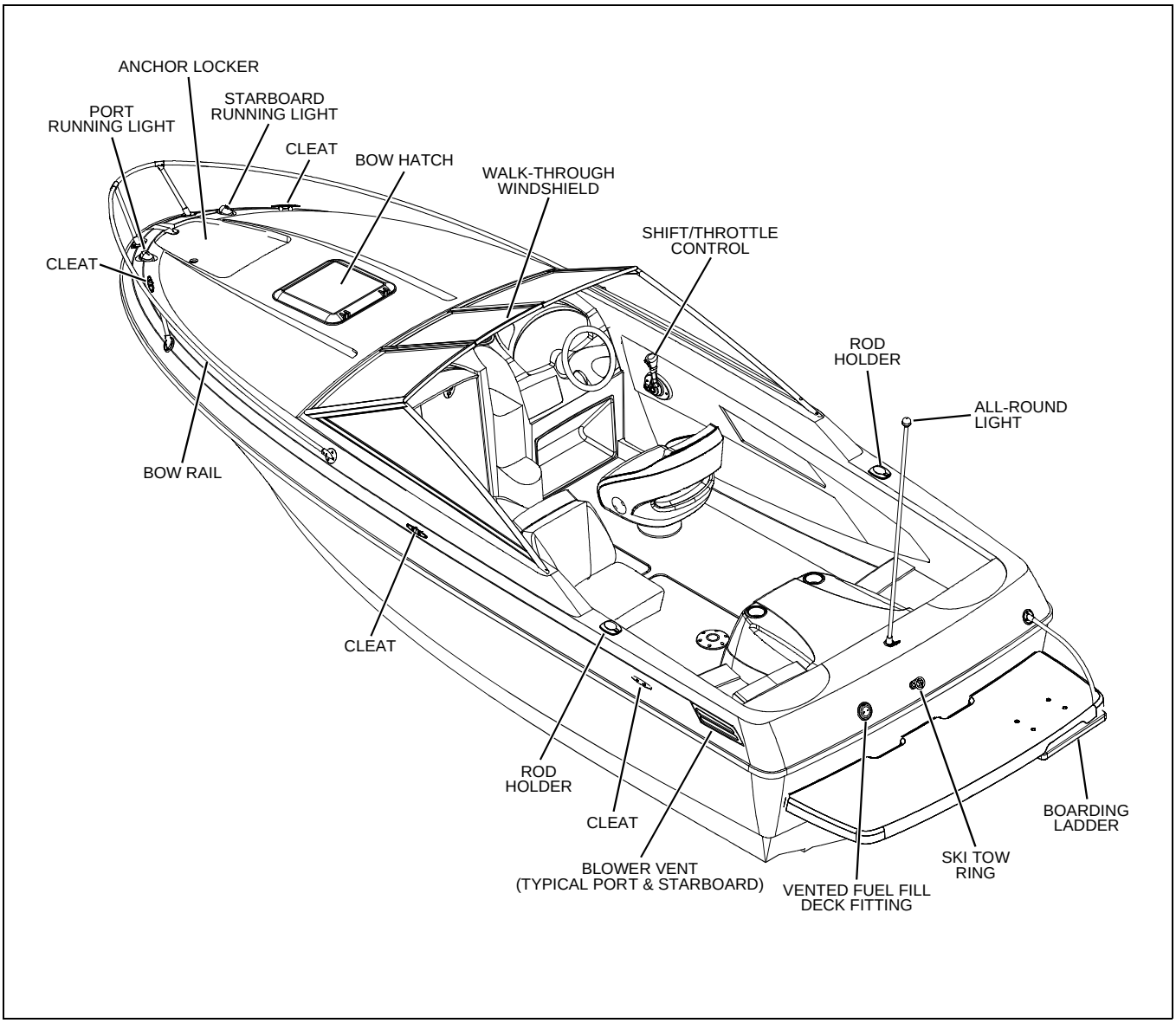

194 Deck View

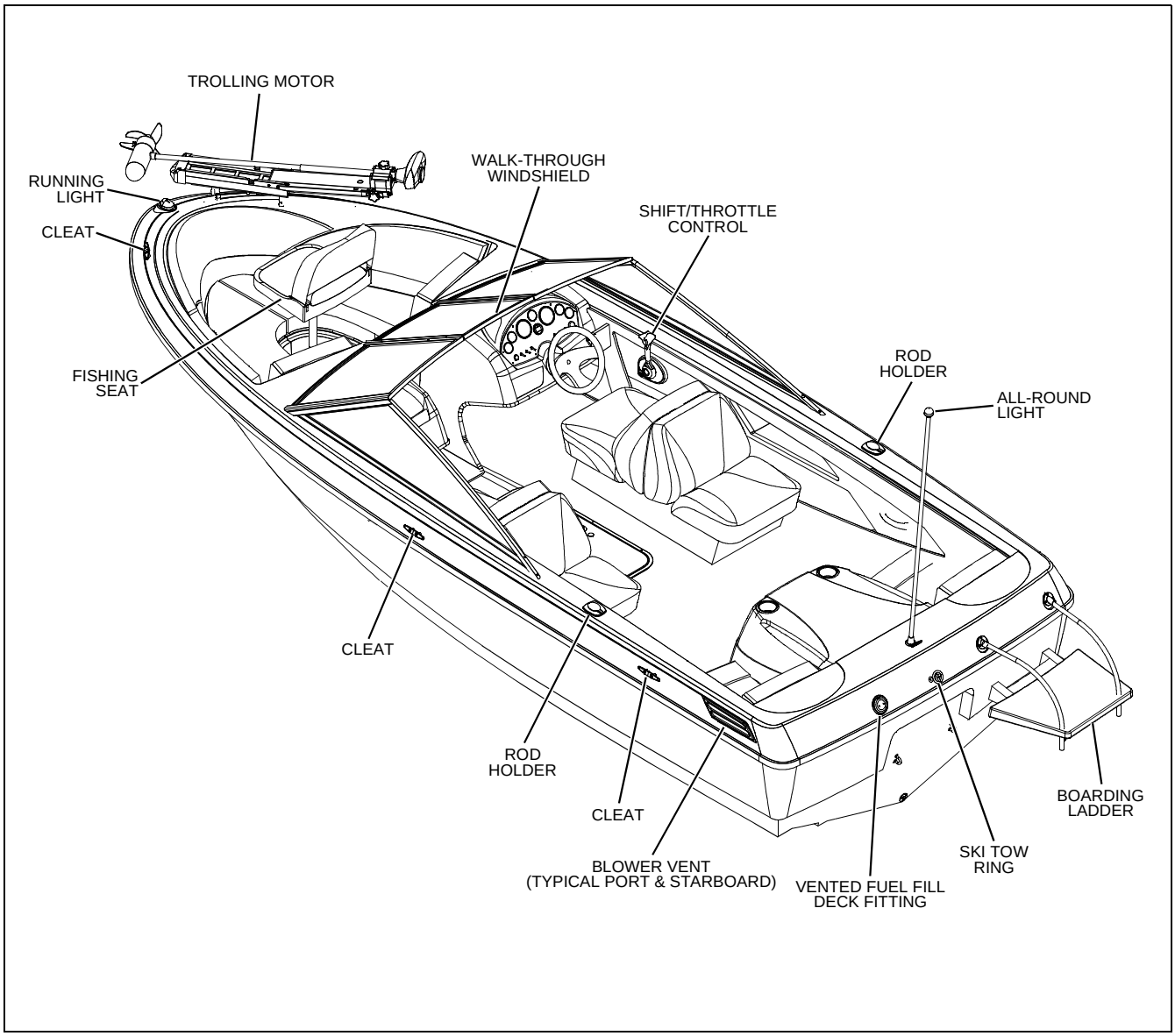

195 Deck View

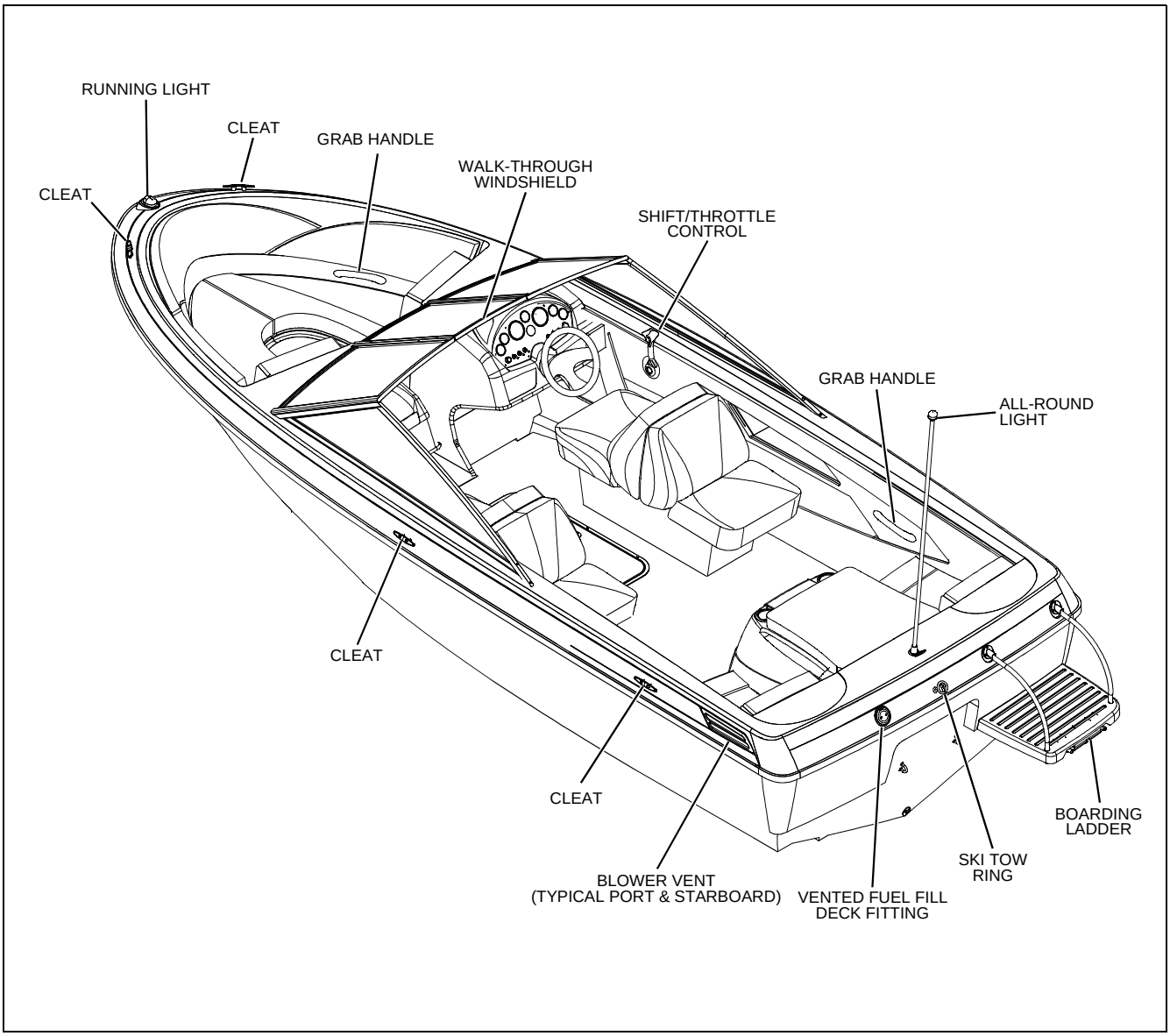

210 Deck View

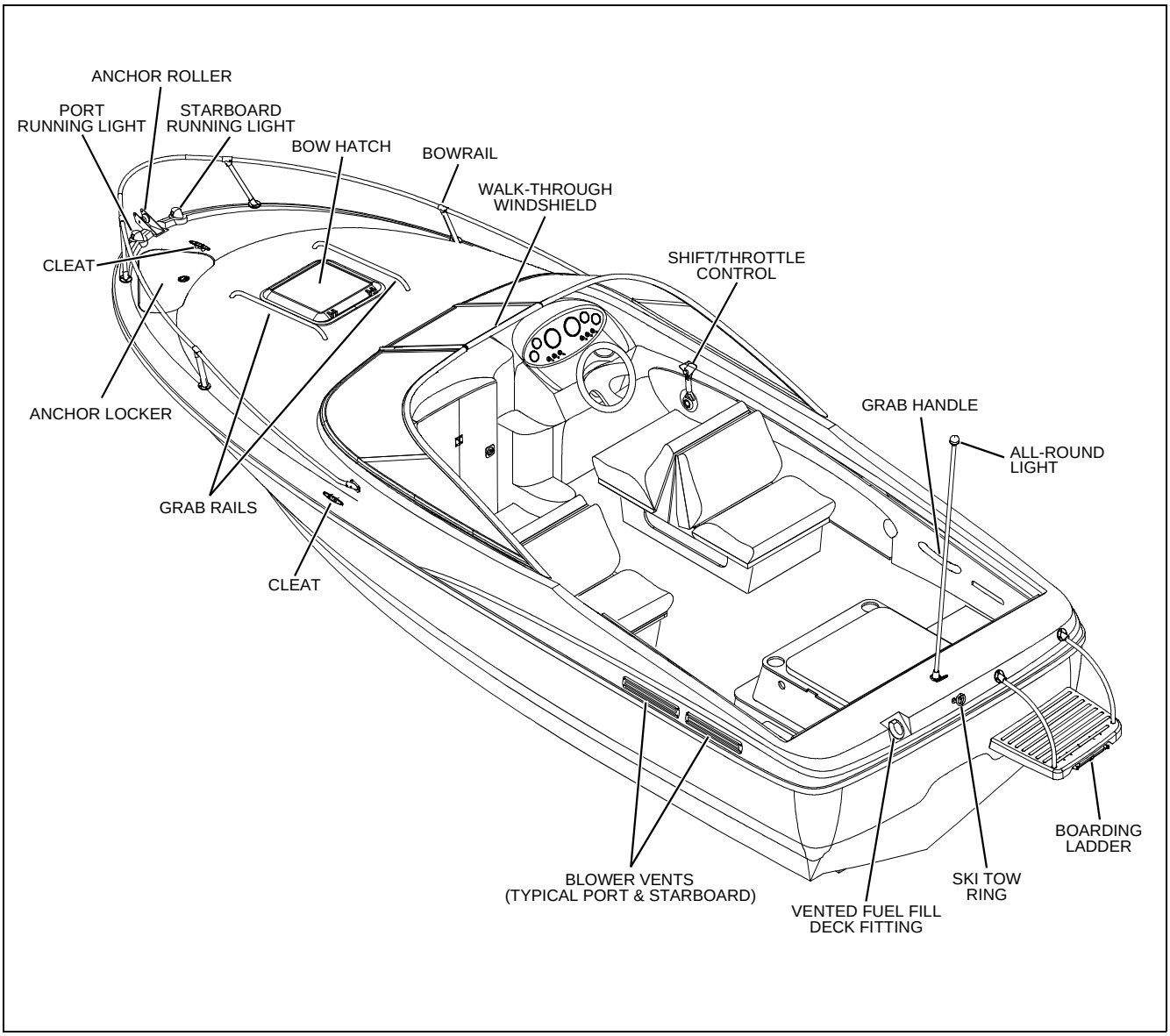

215 Deck Views

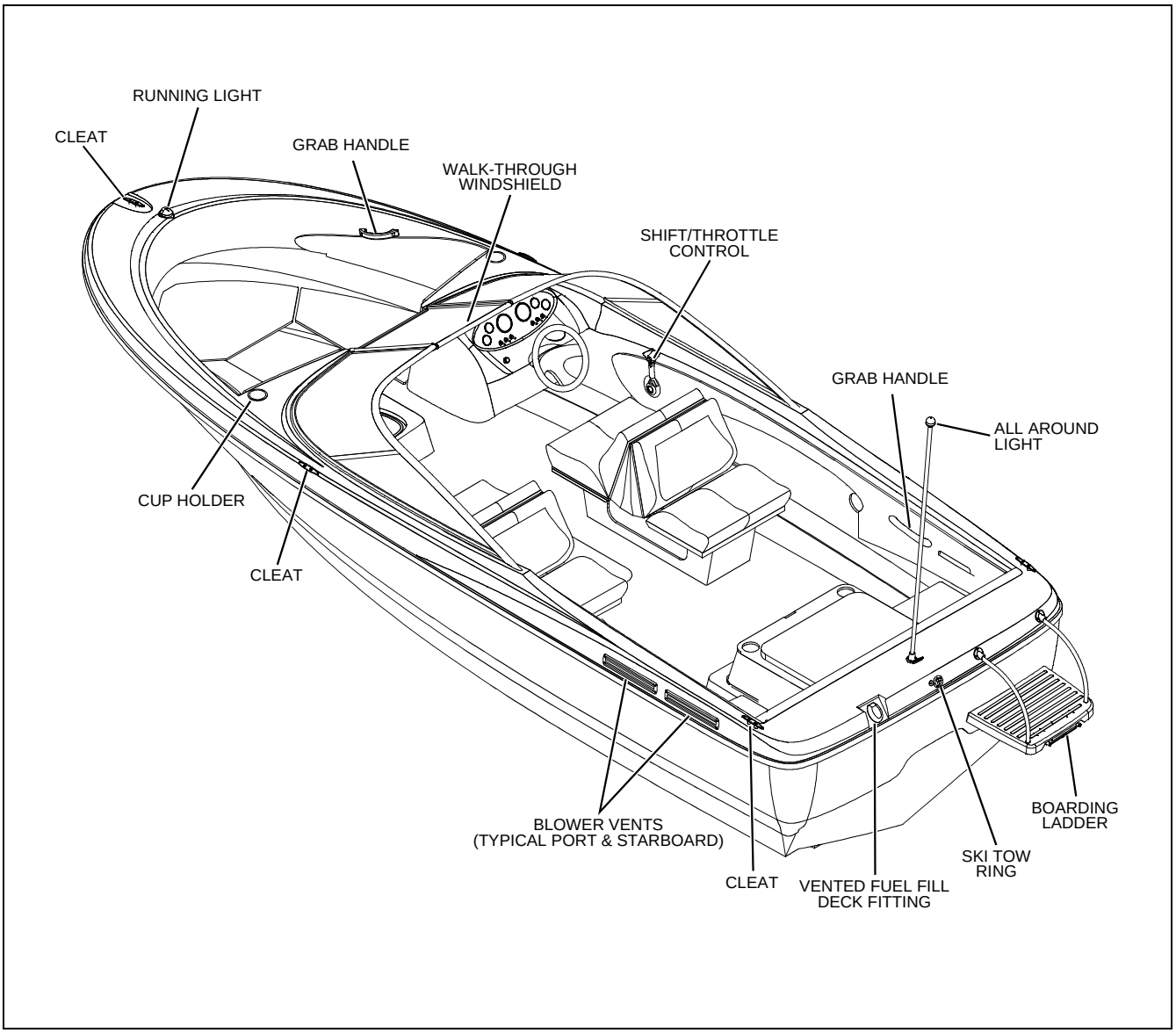

192, 194 & 195 Helm View

NOTE: TYPICAL HELM LAYOUT SHOWN. ACTUAL LAYOUT MAY VARY DEPENDING ON ENGINE AND ACCESSORY OPTIONS.

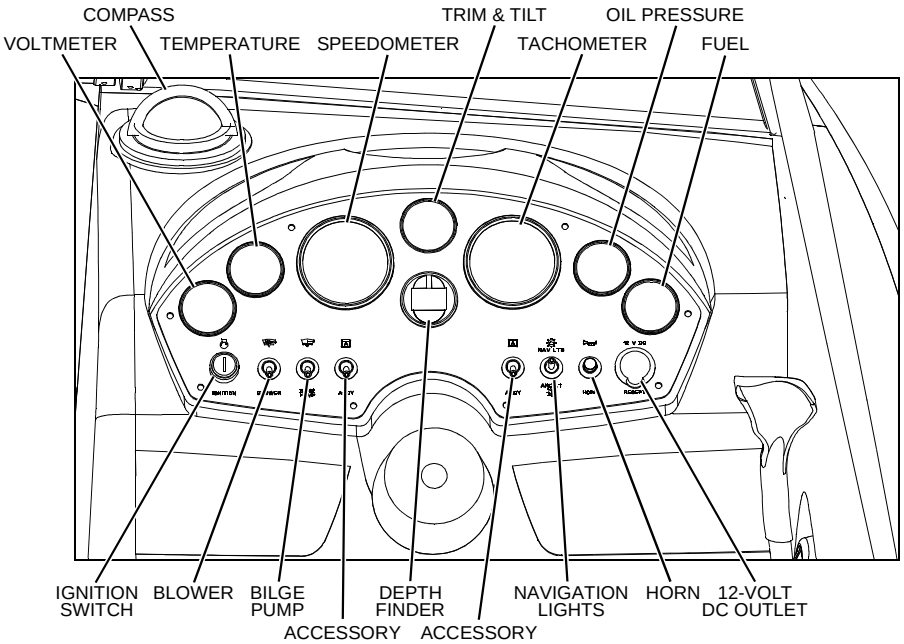

210 & 215 Helm View

NOTE: TYPICAL HELM LAYOUT SHOWN. ACTUAL LAYOUT MAY VARY DEPENDING ON ENGINE AND ACCESSORY OPTIONS.

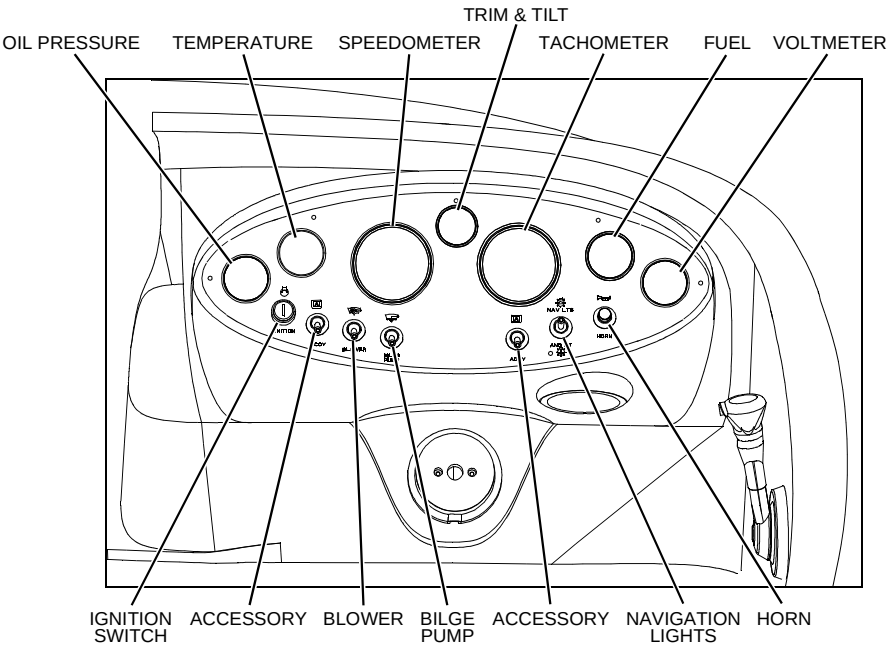

Component Locations

12-Volt DC Accessory Outlets - 192 (2 Total):

- One is located at the helm.
- One is located on the port aft wall in the cabin.

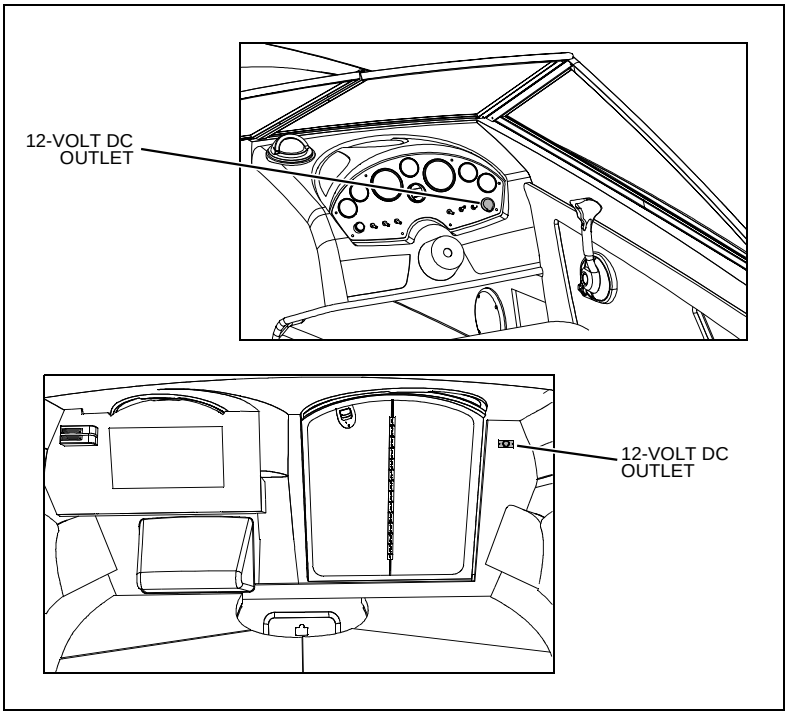

12-Volt DC Accessory Outlets - 194 & 195 (2 Total):

- One is located at the helm.
- One is located inside the port glovebox.

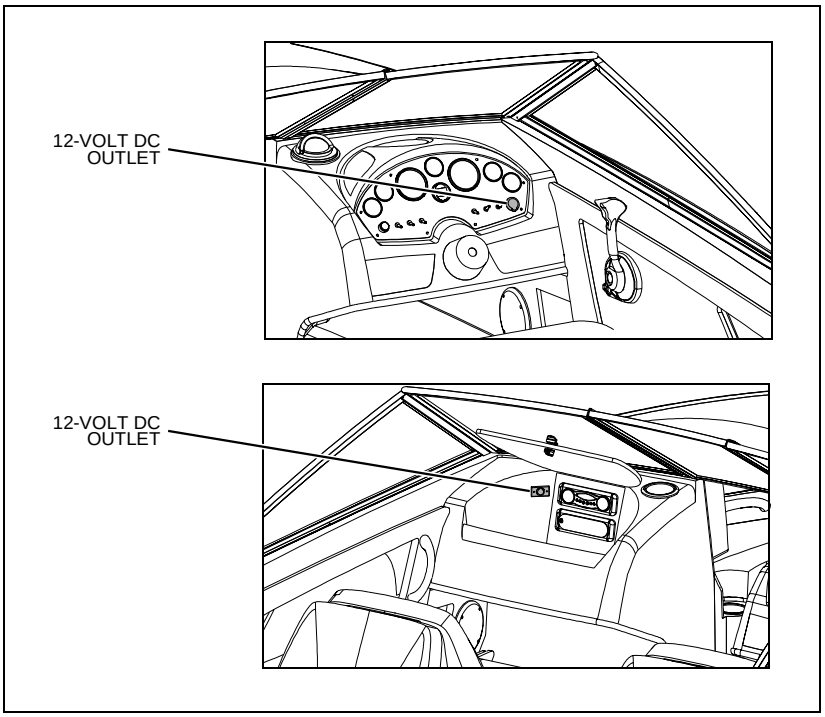

12-Volt DC Accessory Outlets - 210 (2 Total):

- One is located at the helm.
- One is located next to the cabin entry door.

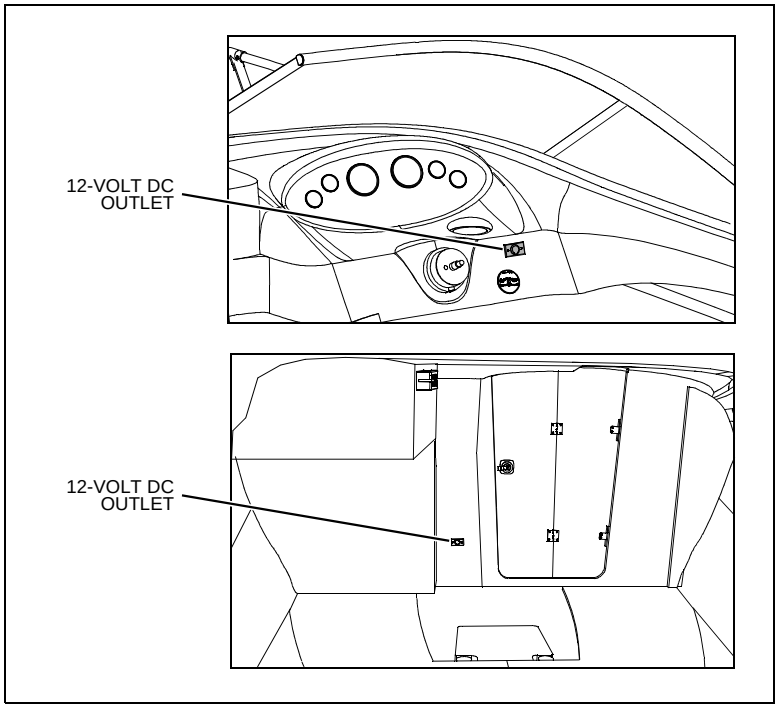

12-Volt DC Accessory Outlets - 215 (2 Total):

- One is located at the helm.
- One is located above the port glovebox, next to the stereo.

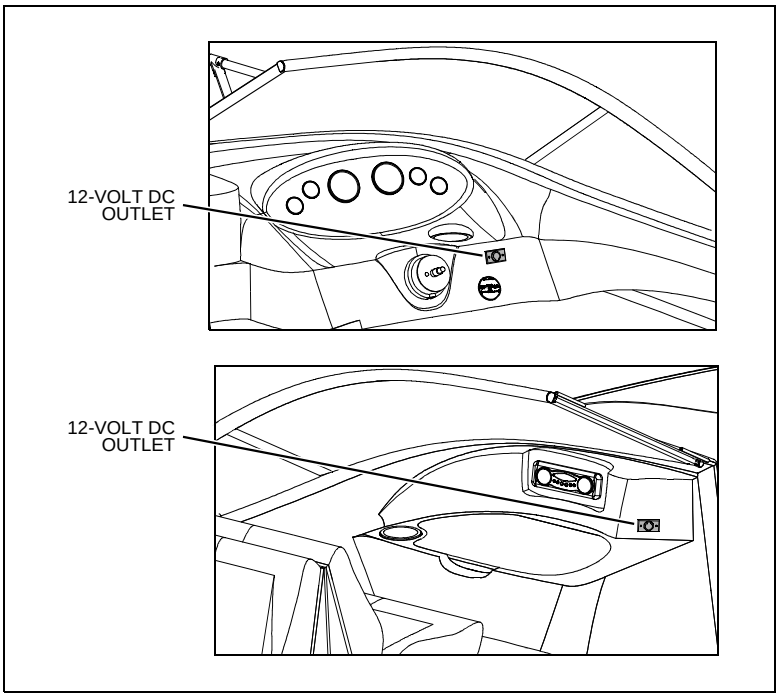

12-Volt DC Fuse Block -192 & 210:

- Located behind the dash.
- Access through the dash access curtain on the starboard aft wall in the cabin.

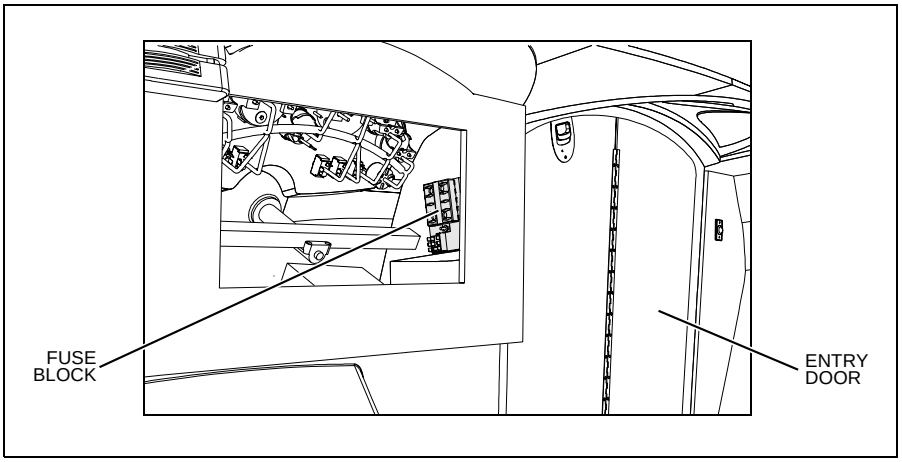

12-Volt DC Fuse Block - 194 & 195: Located under the helm dash.

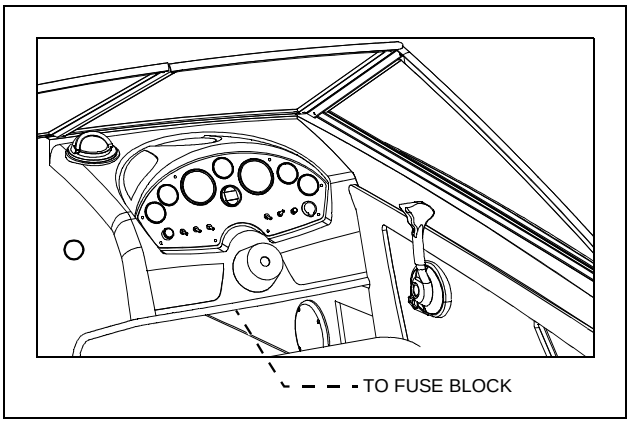

12-Volt DC Fuse Block - 215: Located under the helm dash.

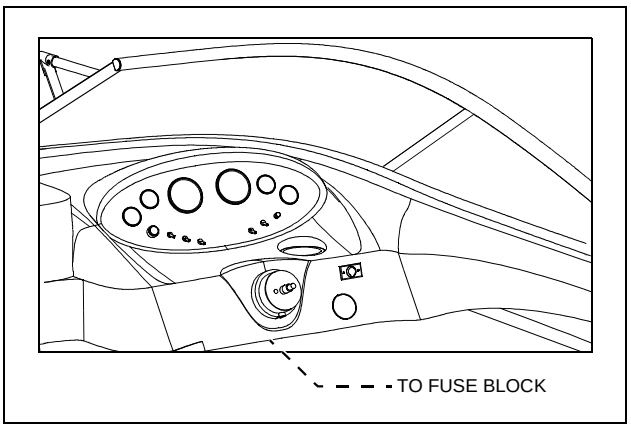

Batteries (Typical):

- Located behind the port and starboard aft seat backs.
- Access by removing the aft seat backs.

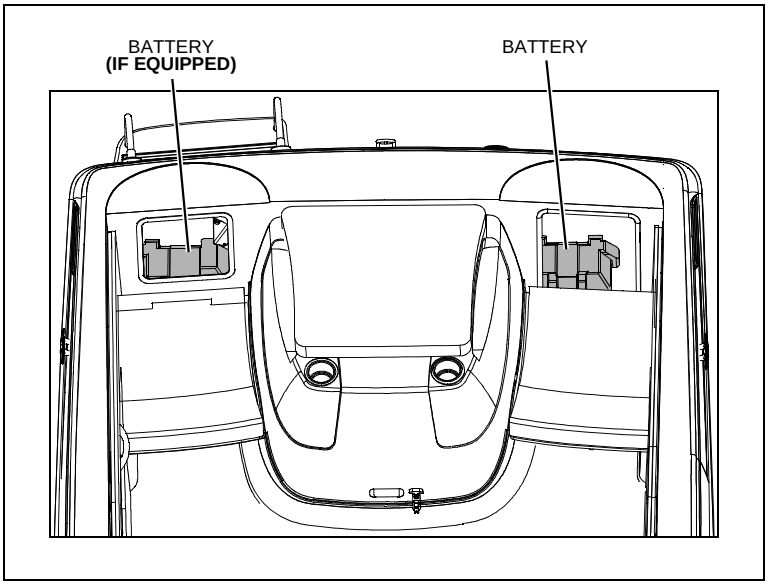

Battery Switch (If Equipped) (Typical):

- Located behind the port aft seat back.
- Access by removing the port aft seat back.

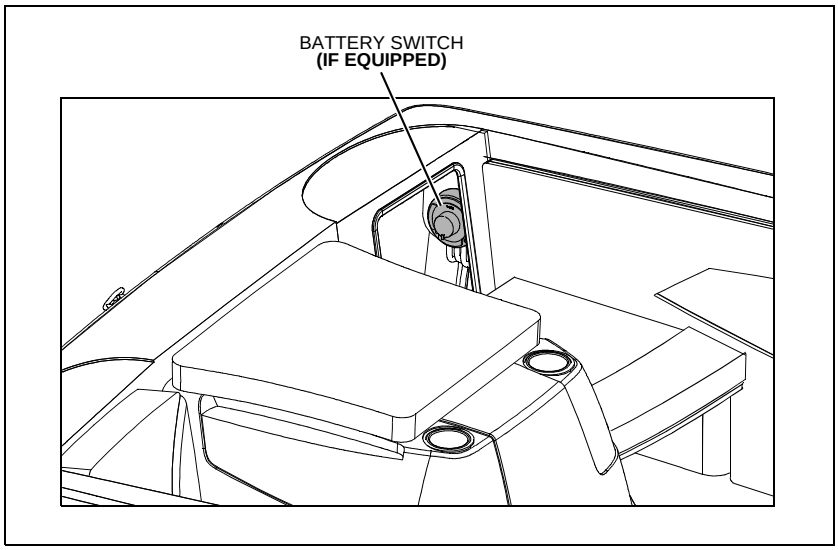

Bilge Pump (Typical):

- Located in the forward area of the engine compartment bilge.
- Access by lifting the motorbox cover.

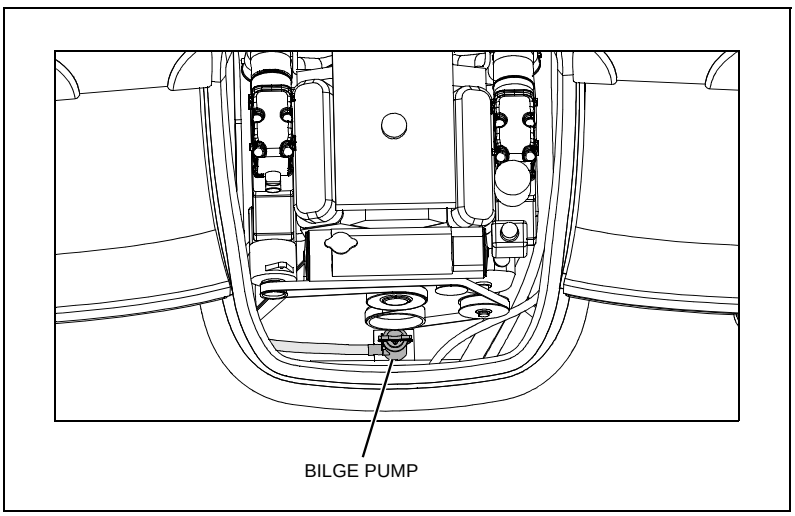

Blower Switch - 192, 194 & 195:
Located at the helm.

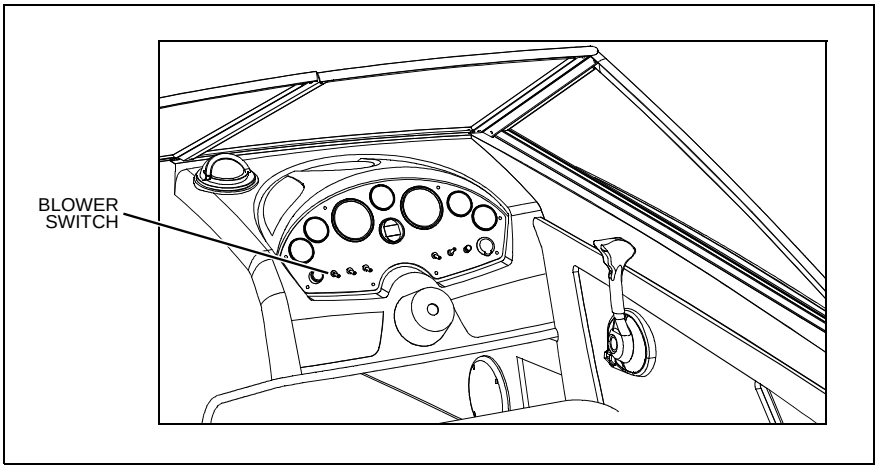

Blower Switch - 210 & 215: Located at the helm.

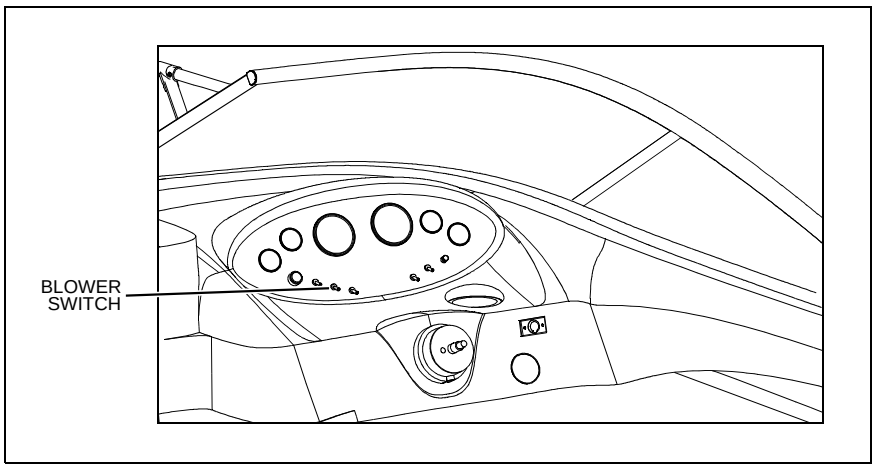

CO Monitor - 192:

Located on the starboard aft wall of the cabin.

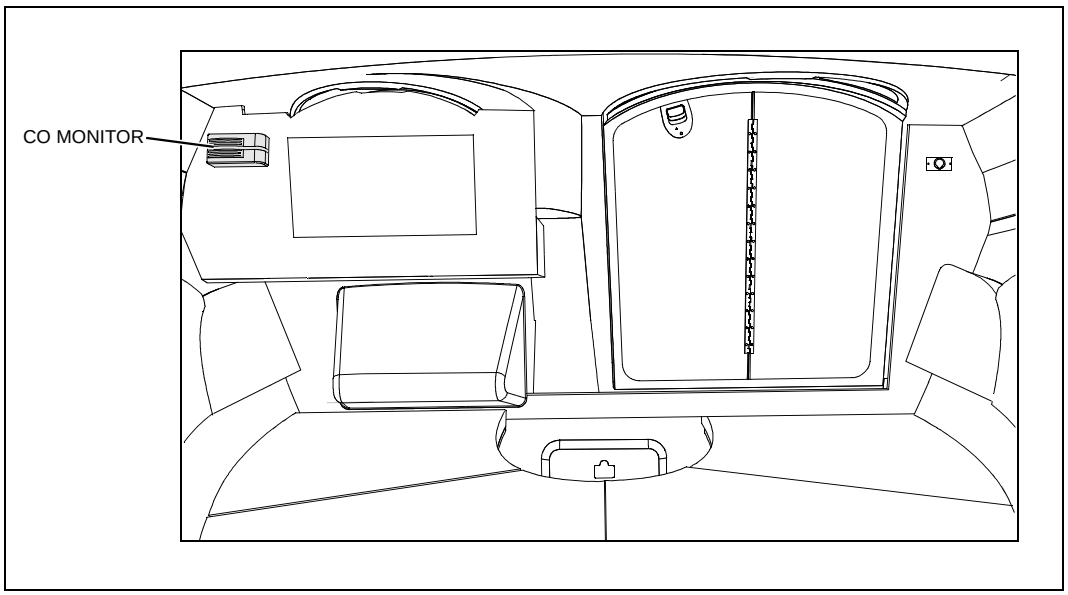

CO Monitor - 210:
Located on the starboard aft wall of the cabin.

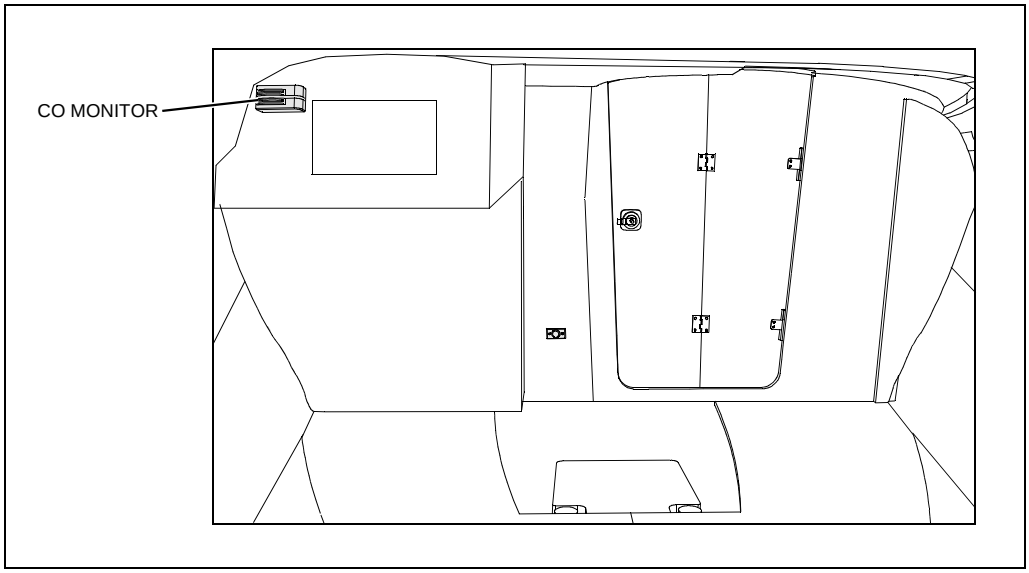

Depth Finder Transducer (If Equipped) (Typical):

- Located in the forward area of the engine compartment bilge.
- Access by lifting the motorbox cover

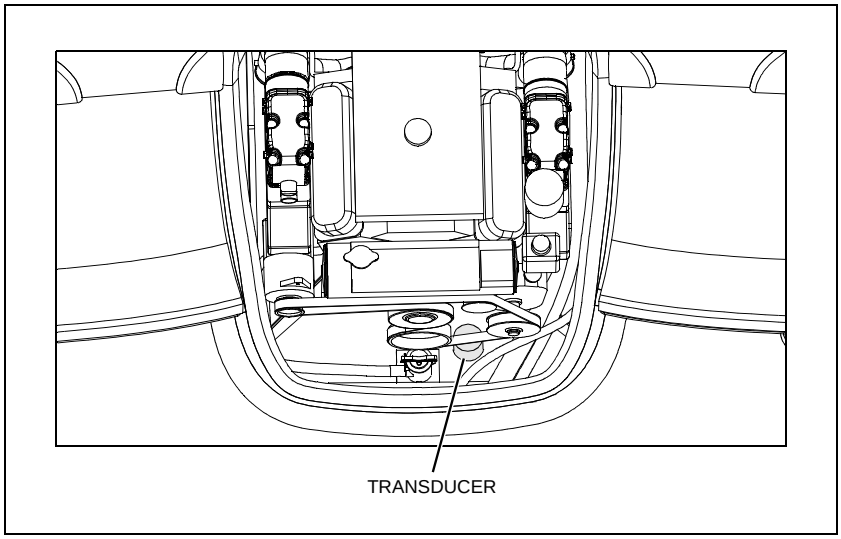

Fuel Tank, Tank Fittings and Sending Unit (Typical):

- Located on the fuel tank, in the forward area of the engine compartment.
- Access by lifting the motorbox cover.

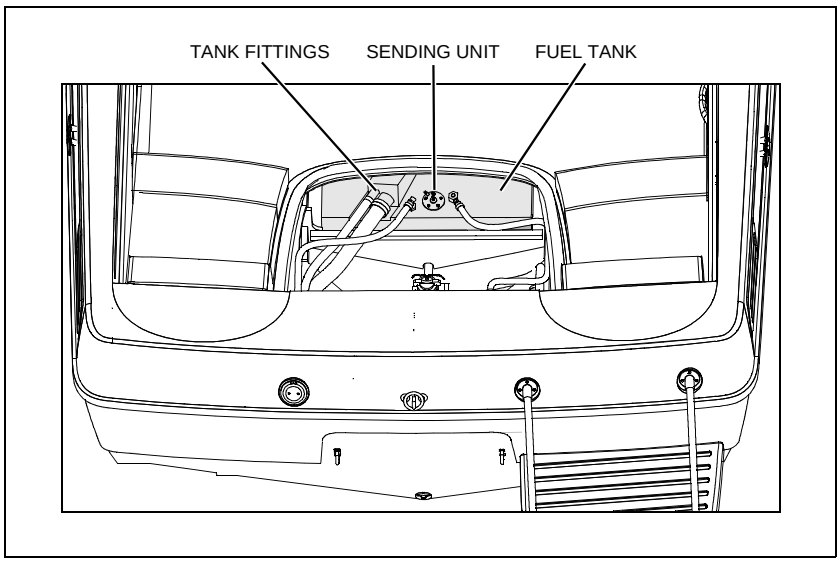

Fuel Fill Deck Fitting (marked GAS or DIESEL) (Typical): Located on the port aft deck.

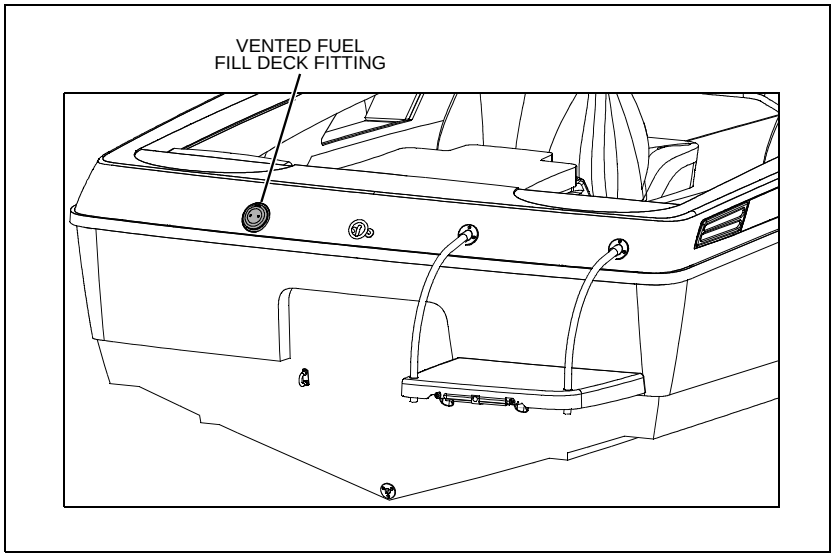

Fuel Filter/Water Separator - 192, 194 & 195 (Diesel Engine Only):

- Located in the forward area of the engine compartment.
- Access by lifting the motorbox cover.

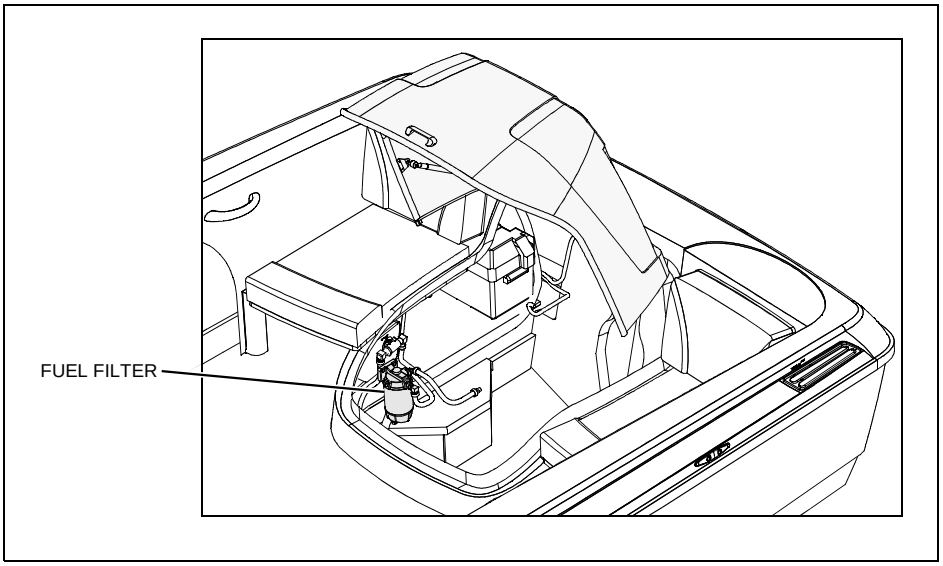

Fuel Shut-off Valve - 192, 194 & 195 (Diesel Engine Only):

- Located under the starboard aft jump seat.
- Access by removing the starboard aft jump seat.

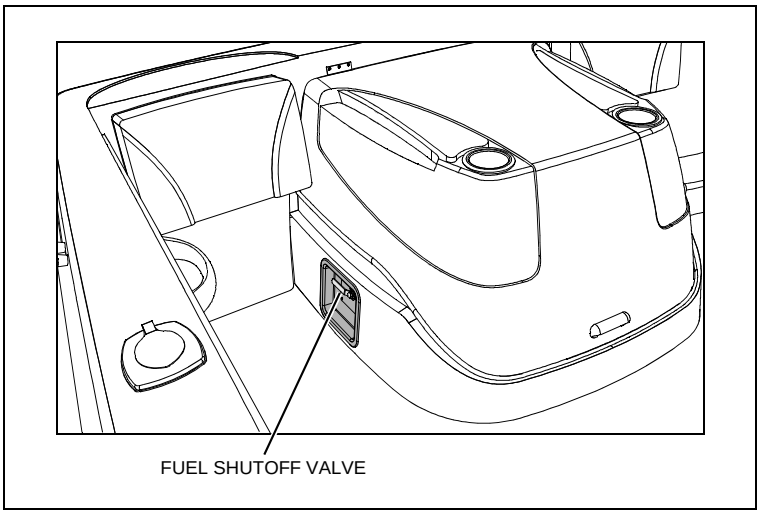

Livewell Aerator Control Valve - 194 Only:

- Located inside the livewell.
- Access by removing the seat cushion and lifting the livewell hatch.

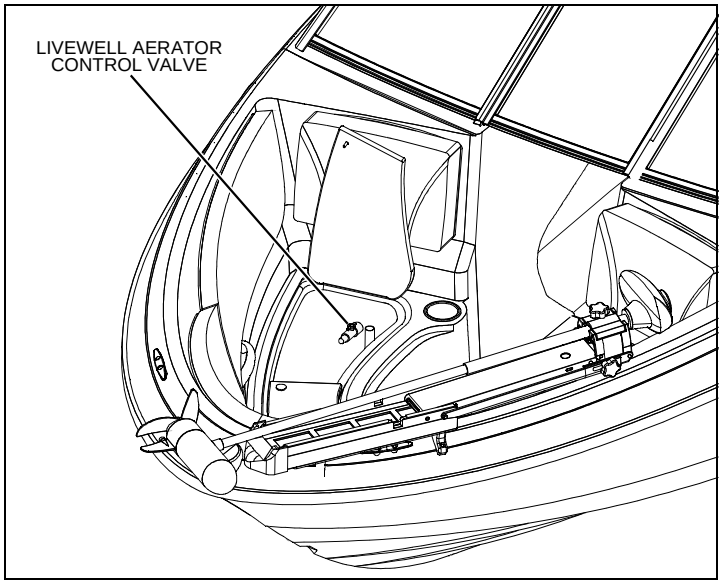

Livewell Pump Switch - 194 Only:

Located at the helm.

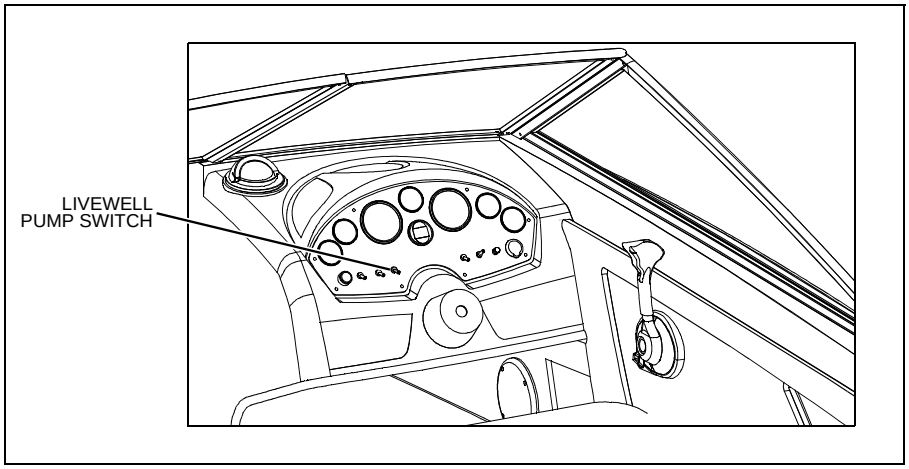

Livewell Seawater Intake Pump - 194 Only:

- Located in the aft area of the engine compartment.
- Access by lifting the motorbox cover.

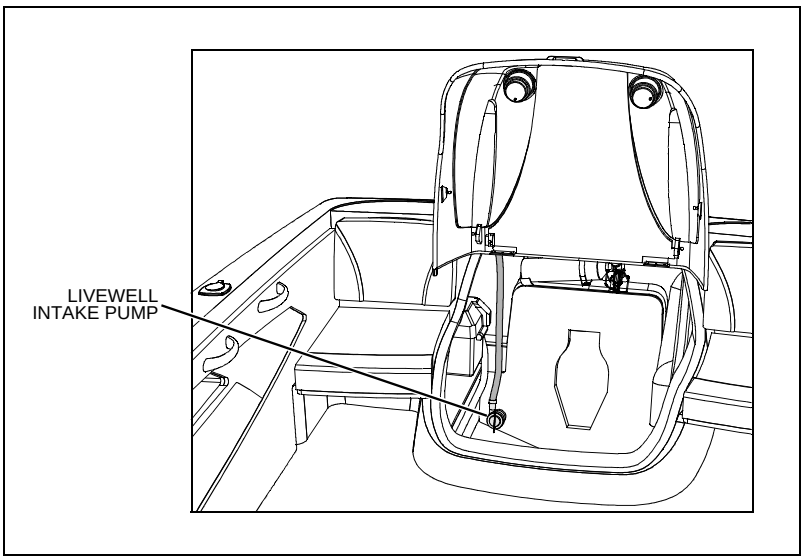

Navigation Lights - 192:

- Red and green running lights are located on the forward deck.
- White all-round light is located on the aft deck.

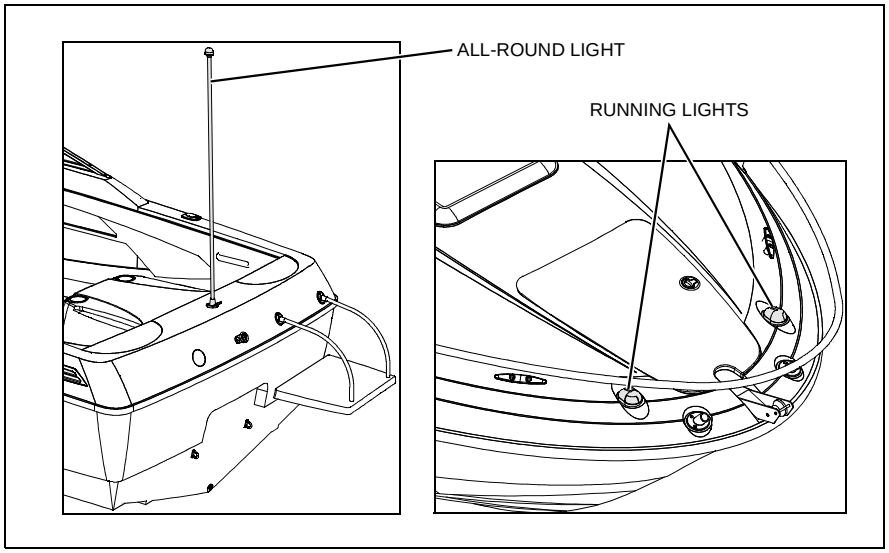

Navigation Lights - 194:

- Red and green running lights are located on the forward deck.
- White all-round light is located on the aft deck.

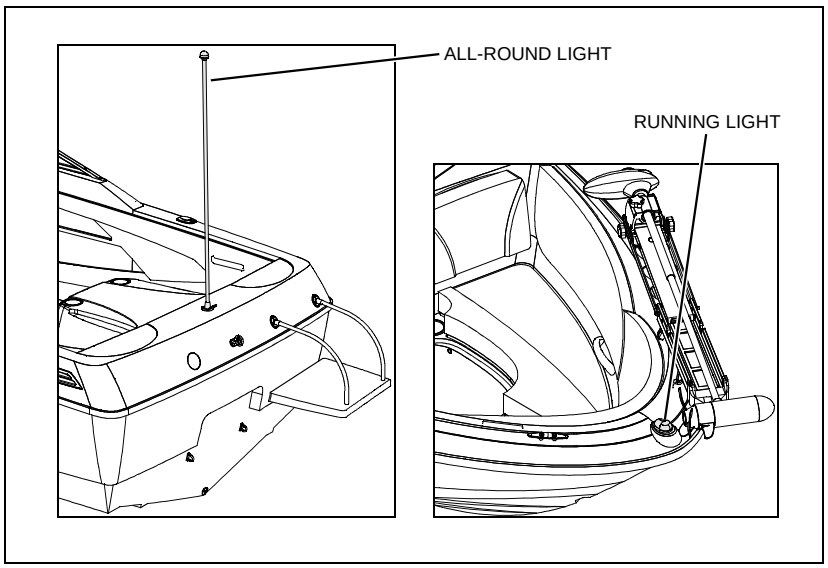

Navigation Lights - 195:

- Red and green running lights are located on the forward deck.
- White all-round light is located on the aft deck.

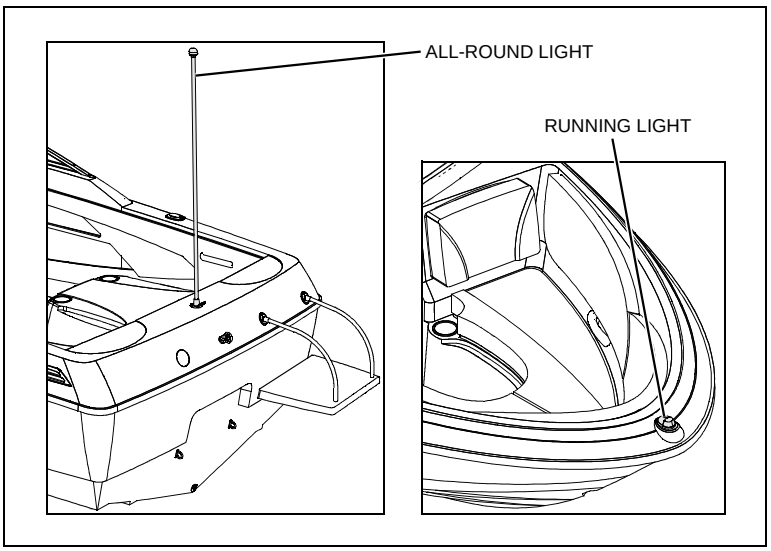

Navigation Lights - 210:

- Red and green running lights are located on the forward deck.
- White all-round light is located on the aft deck.

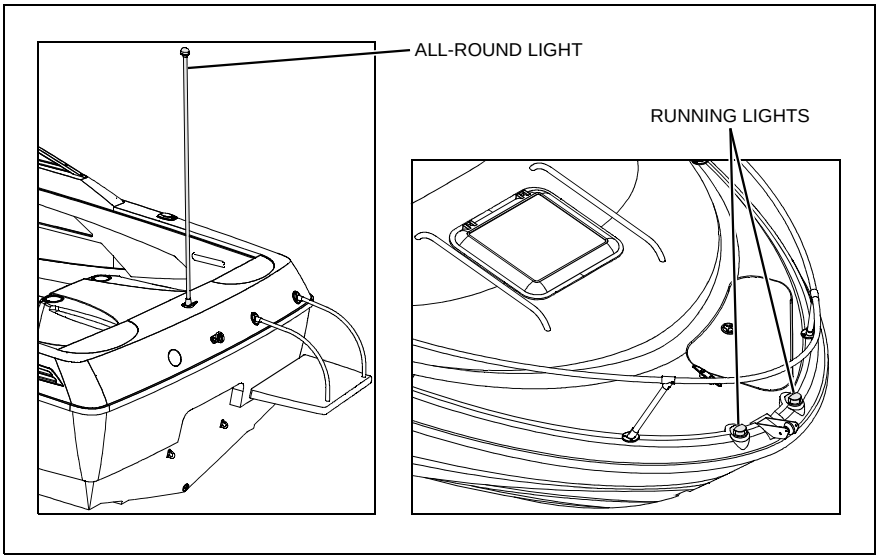

Navigation Lights - 215:

- Red and green running lights are located on the forward deck.
- White all-round light is located on the aft deck.

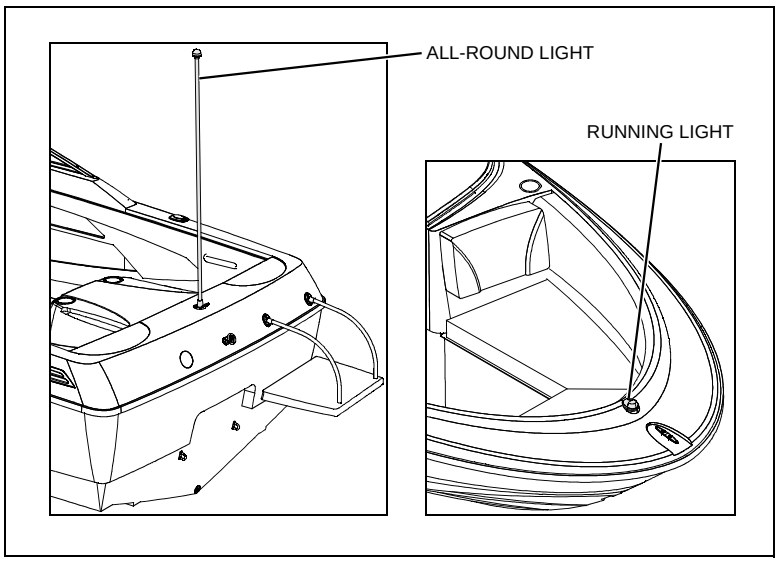

Trim & Tilt Pump (Typical):

- Located behind the starboard aft jump seat back.
- Access by removing the starboard aft jump seat back.

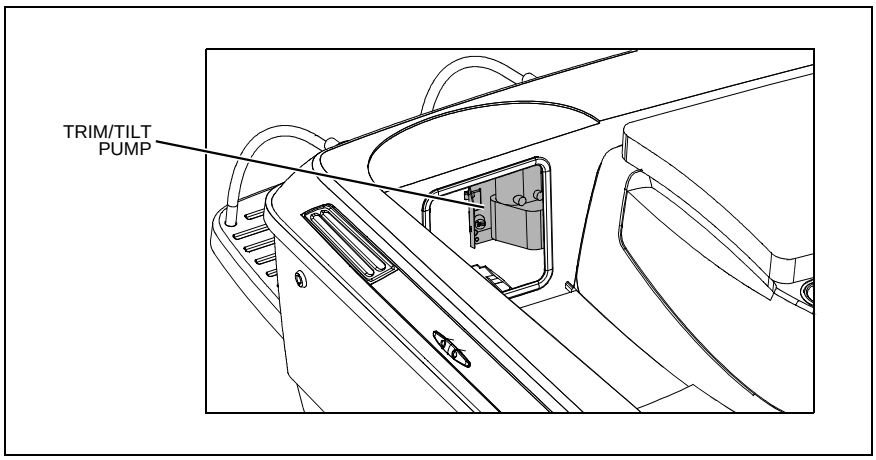

Trolling Motor - 194 Only:

Located on the forward deck.

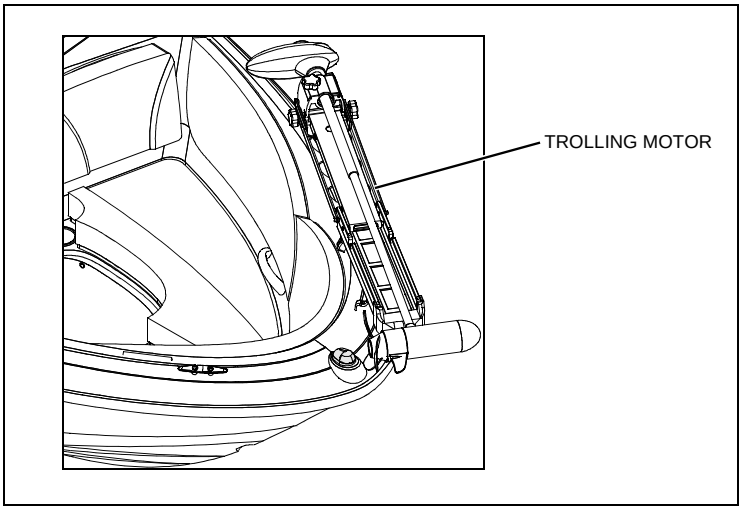

Trolling Motor 12-Volt DC Circuit Breaker - 194 Only:

- Located under the starboard aft jump seat.
- Access by removing the starboard aft jump seat.

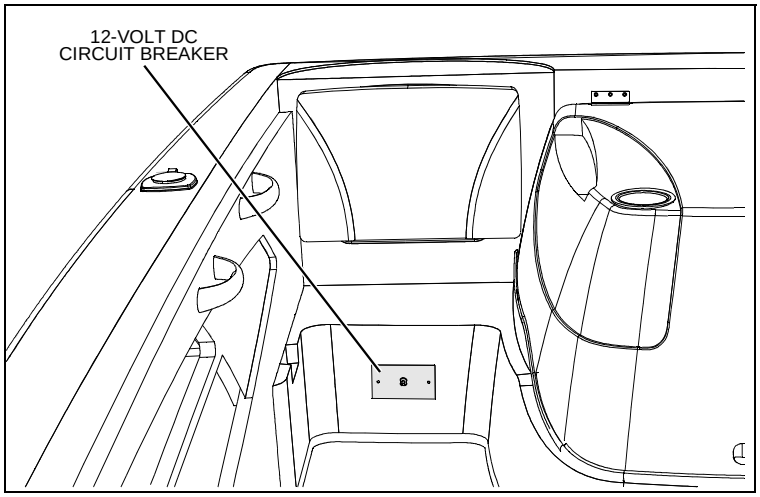

Trolling Motor 12-Volt DC Accessory Outlet - 194 Only: Located at the bow, just above the port forward seat cushion.

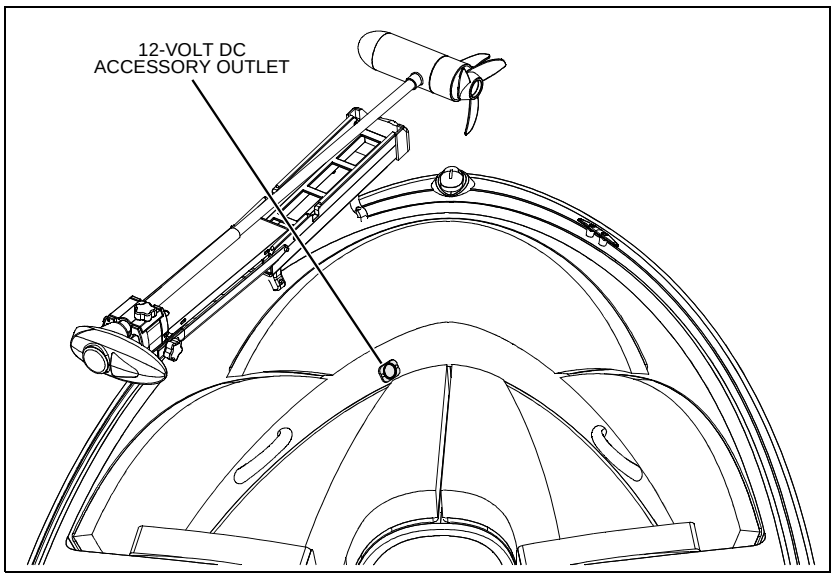

Chapter 4: Propulsion & Related Systems

Engine

Read the engine operation and maintenance manuals ***before*** starting or working on the engine.

Bilge Blower System

WARNING!

FIRE and EXPLOSION HAZARD!

Fuel vapors can explode! *BEFORE* starting the engine:

1. **Check the bilge areas for fuel vapors or leaking fuel. If you see leaking fuel or smell fuel vapors:**
   a. **Do *NOT* start the engine, do *NOT* turn *On* any electrical devices, extinguish *ALL* cigarettes, cigars, and other sources of flame or ignition.**
   b. **Get everyone off your boat.**
   c. **Get trained help to find and fix the problem.**
2. **Run the bilge blower for at least four minutes prior to engine starting, electrical system maintenance, or activation of electrical devices.**

- **If you smell fuel vapors and the engine is already running;**
  a. **Shut *Off* the engine and turn *Off ALL* electrical devices.**
  b. **Extinguish *ALL* cigarettes, cigars, and other sources of flame or ignition.**
  c. **Get trained help to find and fix the problem.**
- ***NEVER* obstruct or change the bilge blower system.**

- The bilge blower system removes explosive fumes from the engine and bilge areas.
- Fresh air is drawn into the engine and bilge areas through the vents.

To make sure the engine and bilge areas are properly ventilated:

- Use the "sniff test" to check the engine and bilge areas for fuel vapors ***before*** starting the engine.
- ***Always*** run the bilge blower for at least four minutes ***before*** starting the engine.
- Continue to run the blower until your boat has reached cruising speed.
- ***Always*** run the blower when running your boat below cruising speed.

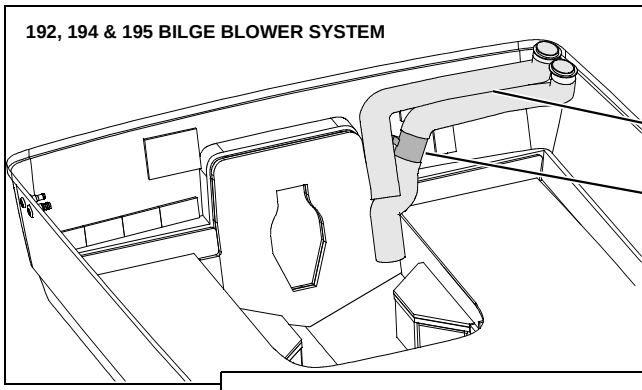

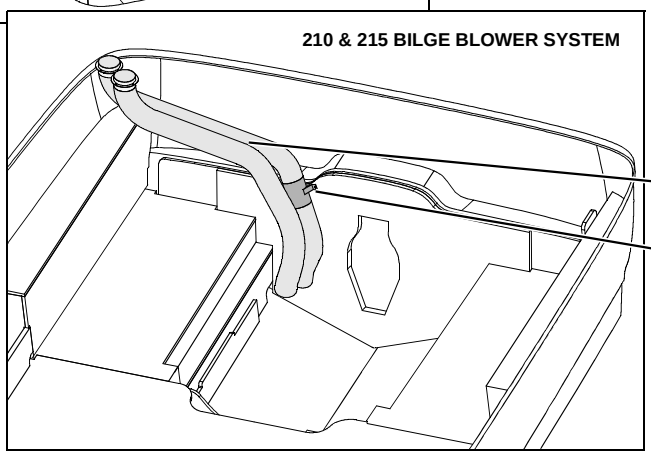

Fuel System

WARNING!

FIRE, EXPLOSION, and OPEN FLAME HAZARD!

- **It is very important that the fuel system be inspected thoroughly the first time it is filled and at each subsequent filling.**
- **The fueling instructions in the *Sport Boat Owner's Manual* and the fuel recommendations in the engine operation manual *MUST* be followed.**

CAUTION

Avoid the storage or handling of gear near the fuel lines, fittings and tank.

NOTICE

- **On diesel engine models, air in the diesel supply system can stop an engine or severely restrict performance.**
- **If you suspect air in the fuel lines, refer to your engine operation manual for detailed instructions on how to bleed the system.**

NOTICE

Carefully read the fuel section of both the *Sport Boat Owner's Manual* and the engine operation manual, paying special attention to the subject of *fuel recommendations*.

Fuel Fill & Vent

- Depending on engine type, the fuel fill deck fitting is marked either GAS or DIESEL.
- If you have problems filling the fuel tank, see if the fuel fill hose or fuel tank vent hose is kinked or collapsed.
- If there are no visible signs of a problem, contact your local dealer.

Gas Engine Fuel Filters

- The fuel pickup tube, located inside the fuel tank, is equipped with a fine mesh screen filter.
- Also, when supplied by the engine manufacturer, a fuel filter is installed on the engine.
- Periodically replace the fuel filter to make sure it remains clean and free of debris.
- Talk to your selling dealer or local marina about fuel additives that help prevent fungus or other buildup in your fuel tank.

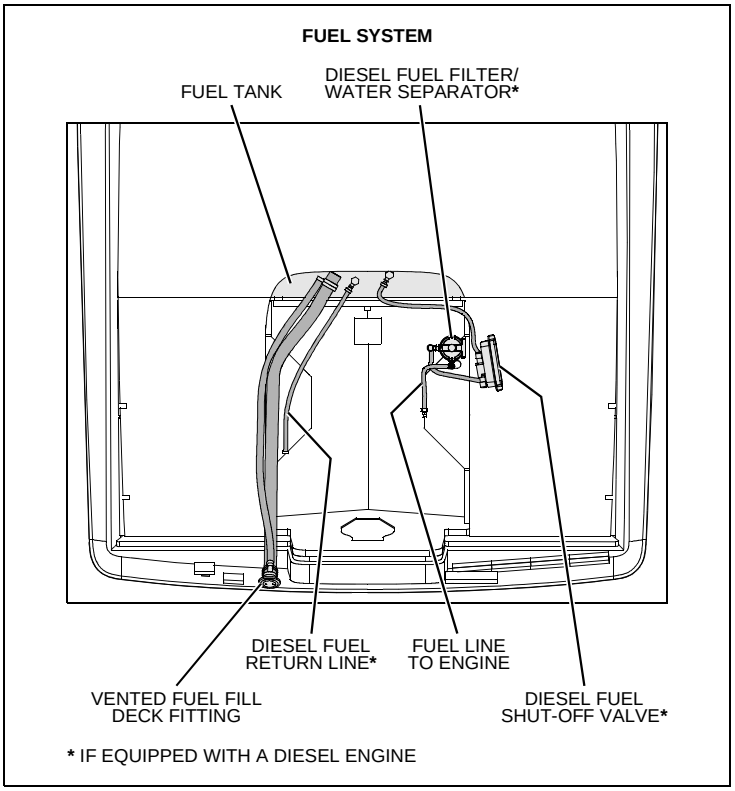

Fuel Filter/Water Separator (Diesel Engine Only)

NOTICE

- **The frequency of water draining or element replacement is controlled by the contamination level in the fuel.**
- **Inspect the collection bowls for water daily.**
- **Replace the elements at least once a year, or when a loss of power is noticed, whichever comes first.**

- The fuel feed line features a fuel filter/water separator.
- Service instructions for the fuel filter/water separator are provided on the filter.

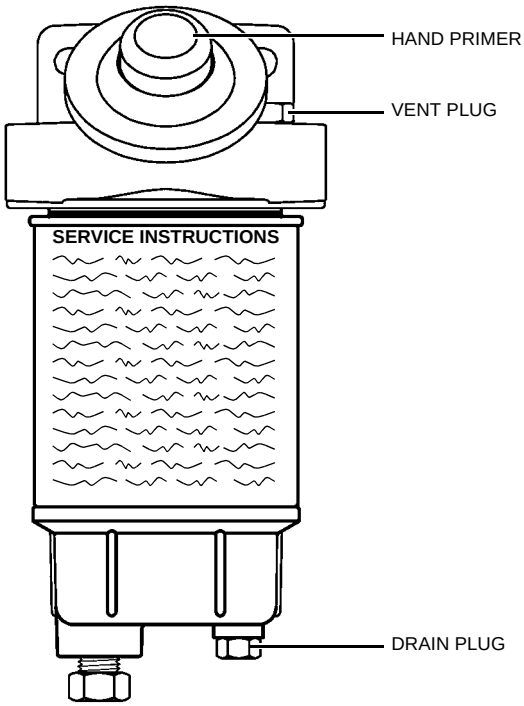

Anti-siphon Valve (Gas Engine Only)

NOTICE

- **If an engine running problem is diagnosed as fuel starvation, check the anti-siphon valve.**
- **If the valve is stuck or clogged, *ONLY* change or replace it while the engine is *Off*.**
- ***NEVER* run the engine with the anti-siphon valve removed, except in an emergency.**

- The anti-siphon valve is a vital fuel system part.
- If the fuel line ruptures, this valve will prevent the fuel from siphoning from the tank.
- The valve is located on the fuel tank, where the fuel feed line attaches to the tank.
- The valve is spring loaded and is opened by fuel pump vacuum.

Quick Oil Drain System

The quick oil drain hose assembly was attached to the engine oil pan at the factory. However, some minor assembly is still needed ***before*** you can use this system.

NOTE: This is not the only method for changing your oil. Your selling dealer can recommend other methods.

How to install the quick oil drain system:

1. Unscrew the factory installed bilge plug from the bilge drain (A). **NOTE:** Keep the original factory bilge plug on your boat as a spare.
2. Unclip the quick oil drain assembly from the wire loop (B) on the engine.
3. Unclip the bilge plug's draw cord (C) from the oil drain plug's draw cord (D).
4. Thread the oil drain plug's draw cord (D) through the bilge drain (A).
5. Pull the oil drain plug (E), and the oil drain hose (F) through the bilge drain.
6. Adjust the hose stop clamp (G) so that no more than 12 inches of hose, including the oil drain plug, can extend out of the bilge drain (A).
7. Clip the bilge plug's draw cord (C) back to the oil drain plug's draw cord (D).
8. Push the oil drain hose, oil drain plug, and both draw cords through the bilge drain and into the bilge area.
9. Screw the bilge plug (H) into the bilge drain (A) and tighten firmly.

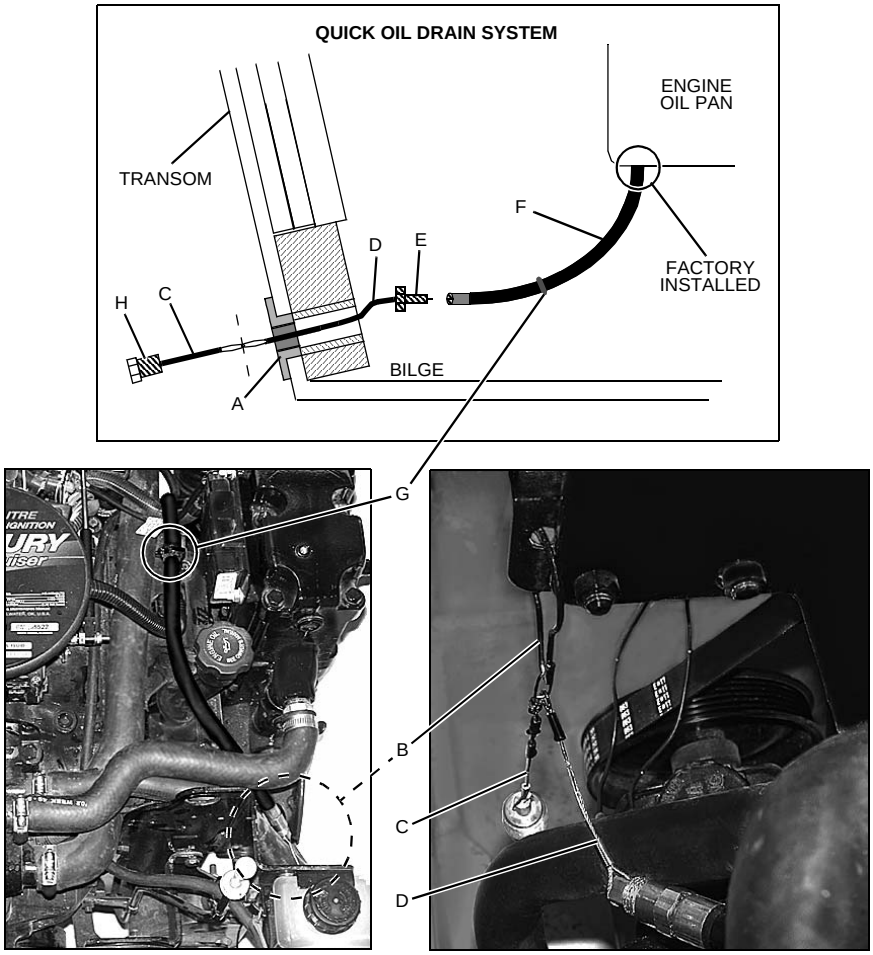

To drain the engine oil:

1. Remove your boat from the water.
2. Unscrew the bilge plug.
3. Pull the draw cord until the oil drain plug and the oil drain hose slide out of the bilge drain.
4. Place the end of the oil drain hose into a suitable container.
5. Unscrew the oil drain plug and drain the engine oil.
6. Replace the oil drain plug.
7. Push the drain hose back into the bilge.
8. Replace the bilge plug and tighten firmly.

***Always* dispose of waste oil in accordance with local regulations.**

Chapter 5: Controls & Gauges

Steering

- Your boat features a power-assisted* rack-and-pinion steering system.
- For information about the power-assist fluid reservoir, refer to the engine operation and maintenance manual.
- Boat steering is ***not*** self-centering.
- Refer to the engine manual for more steering system details.

*3.0L engines feature mechanical rack-and-pinion steering.

Shift/Throttle Controls

WARNING!

LOSS OF CONTROL HAZARD!

Improper maintenance of the shift/throttle hardware may cause a sudden loss of control!

Read ***all*** of the information about the shift/throttle controls in the shift/throttle manual, the engine operation manual, and the *Sport Boat Owner's Manual*.

Power Trim & Tilt

- The stern drive on your boat is equipped with power trim and tilt.
- Trim and tilt instructions are provided in the engine operation manual and the shift/throttle manual.

Gauges

Cleaning the Gauges

⚠ CAUTION

PRODUCT or PROPERTY DAMAGE HAZARD!

- **Use only mild soap and water to clean the gauge lenses and bezels.**
- **Use of other cleaners, including common window cleaning solutions, may cause the lenses to crack.**
- **Lenses cracked in this manner will *NOT* be covered by our warranty.**

Gauge Fogging

- Moisture may occasionally find its way into the gauges causing lens fogging.
- Turning ***On*** the gauge lights will help dry the lenses.
- Fogging will not harm the gauges.

Radio Transmission Interference

VHF or other radio transmissions may cause brief erratic readings on the tachometer. This will not damage the tachometer gauge or affect its accuracy when not transmitting.

Fuel Gauge

It is normal for the pointer on your fuel gauge to bounce as fuel sloshes back and forth in the fuel tank.

Compass (If Equipped)

NOTICE

- **Compass accuracy can be affected by many factors.**
- **Have a qualified technician calibrate your compass.**
- **Make sure the technician gives you a deviation card which shows the corrections to apply in navigational calculations.**
- **Keep a copy of the deviation card at the helm.**

Depth Finder (If Equipped)

⚠ WARNING!

- **Do *NOT* use the depth finder as a navigational aid to prevent collision, grounding, boat damage or personal injury.**
- **When your boat is moving, submerged objects will *NOT* be seen until they are already under your boat.**
- **Bottom depths may change too quickly to allow time for your boat to react.**
- **If you suspect shallow water or submerged objects, run your boat at very slow speeds.**

Chapter 6: Plumbing

Bilge Pump

NOTICE

Discharge of oil, oil waste, or fuel into navigable waters is prohibited by law. Violators are subject to legal action by the local authorities.

- Your boat has a bilge pump for pumping water out of the bilge.
- An autofloat switch, mounted next to the bilge pump, will turn ***On*** the bilge pump if bilge water rises above a preset level.
- You can also turn ***On*** the bilge pump yourself using the switch at the helm.
- The bilge pump is wired directly to the battery. Unless the battery is dead, the bilge pump should work even when your boat is unattended.

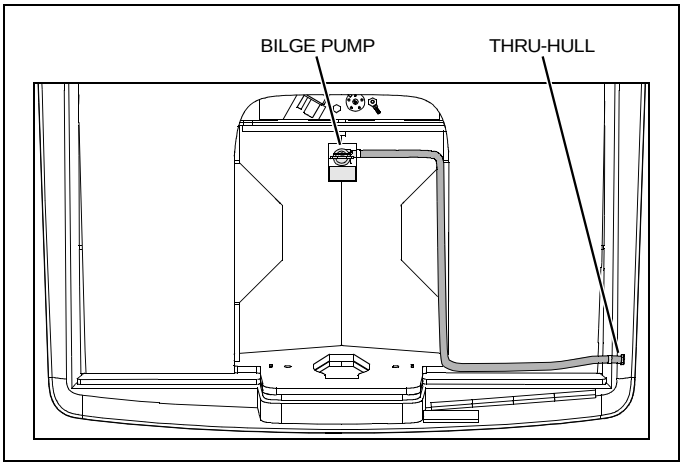

Bilge Pump Testing

- The bilge pump is vital to the safety of your boat.
- Test the bilge pump often.

1. Turn ***On*** the bilge pump switch at the helm.
2. Make sure that water in the bilge is pumped overboard.

- If there is water in the bilge and the pump motor is running but ***not*** pumping, inspect the discharge hose for a kink or collapsed area.
- If the discharge hose looks okay, check the bilge pump housing for clogging debris (see below).

Checking for clogging debris:

1. Remove the pump motor from the housing:
   a. Lift the tab while rotating the fins counter-clockwise.
   b. Lift out the pump motor.
   c. Clear the housing of debris.
2. Reinstall the pump motor:
   a. Make sure the "O" ring is properly seated.
   b. Coat the "O" ring with a light film of vegetable or mineral oil.
   c. Align the cams on either side of the pump motor with the slots on the housing.
   d. Press the pump motor into the housing while twisting clockwise.
3. Check the reinstallation by trying to twist the fins counter-clockwise ***without*** lifting the tab; the pump motor should stay in place.

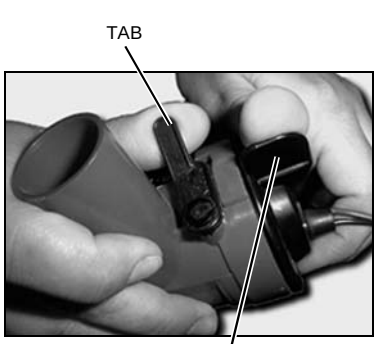

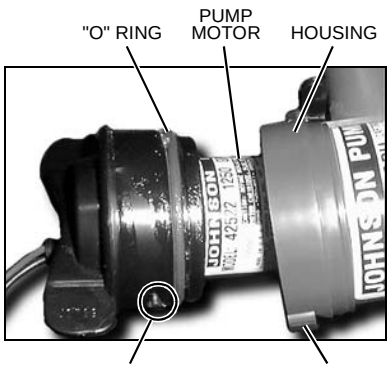

Autofloat Switch

- The autofloat switch turns the bilge pump ***On*** when water rises above a preset level.
- Test the autofloat switch often.

Autofloat switch testing:

1. Lift the float switch test button to turn ***On*** the bilge pump.
   - If the pump does not turn ***On***, check the fuse on the fuse block.
   - If the fuse is good, but the switch still does not work, it may mean the switch is bad, or the battery is dead.
2. After testing, push the test button all the way ***down*** to return the float switch to auto mode.

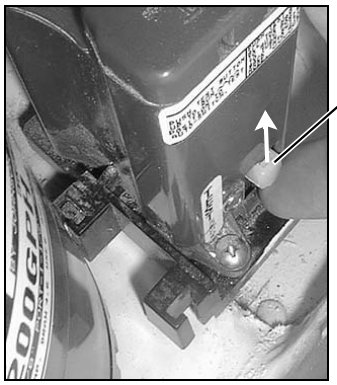

AUTOFLOAT SWITCH TESTING

TEST BUTTON

LIFT SWITCH UP
(BILGE PUMP SHOULD TURN ON)

PUSH SWITCH DOWN
(BILGE PUMP SHOULD TURN OFF)

⚠ CAUTION

When the test is completed on the float switch, you *MUST* push the test button *ALL THE WAY DOWN* to return the switch to auto mode!

Livewell System (194 Only)

WARNING!

FLOODING and SWAMPING HAZARD!

- ***NEVER* leave your boat unattended while the livewell system is running.**
- **Any leak or break in this system may allow large amounts of water to flood the bilge, which could swamp the battery(s), and even sink your boat.**

CAUTION

SYSTEM DAMAGE HAZARD!

***BEFORE* turning *On* the livewell system, make sure the intake seacock is *Open*.**

Filling & Using the Livewell

1. Insert the standpipe into the drain fitting at the bottom of the tank.
2. On the switch panel, turn ***On*** the livewell pump (for the location of the livewell pump switch, see the *Component Locations* section in *Chapter 2* of this *supplement*).

- Remove the standpipe to drain the livewell.

Troubleshooting

If you followed the instructions in steps 1 and 2 above, but water does ***not*** pump into the tank, possible causes are:

- A hose is collapsed or there is clogging debris in the system.
- The livewell fuse is blown.

Aeration Tips

The level of aeration is controlled by the aerator control valve.

- In clean open water little or no aeration may be needed.
- In brackish back waters a higher level of aeration may be needed.

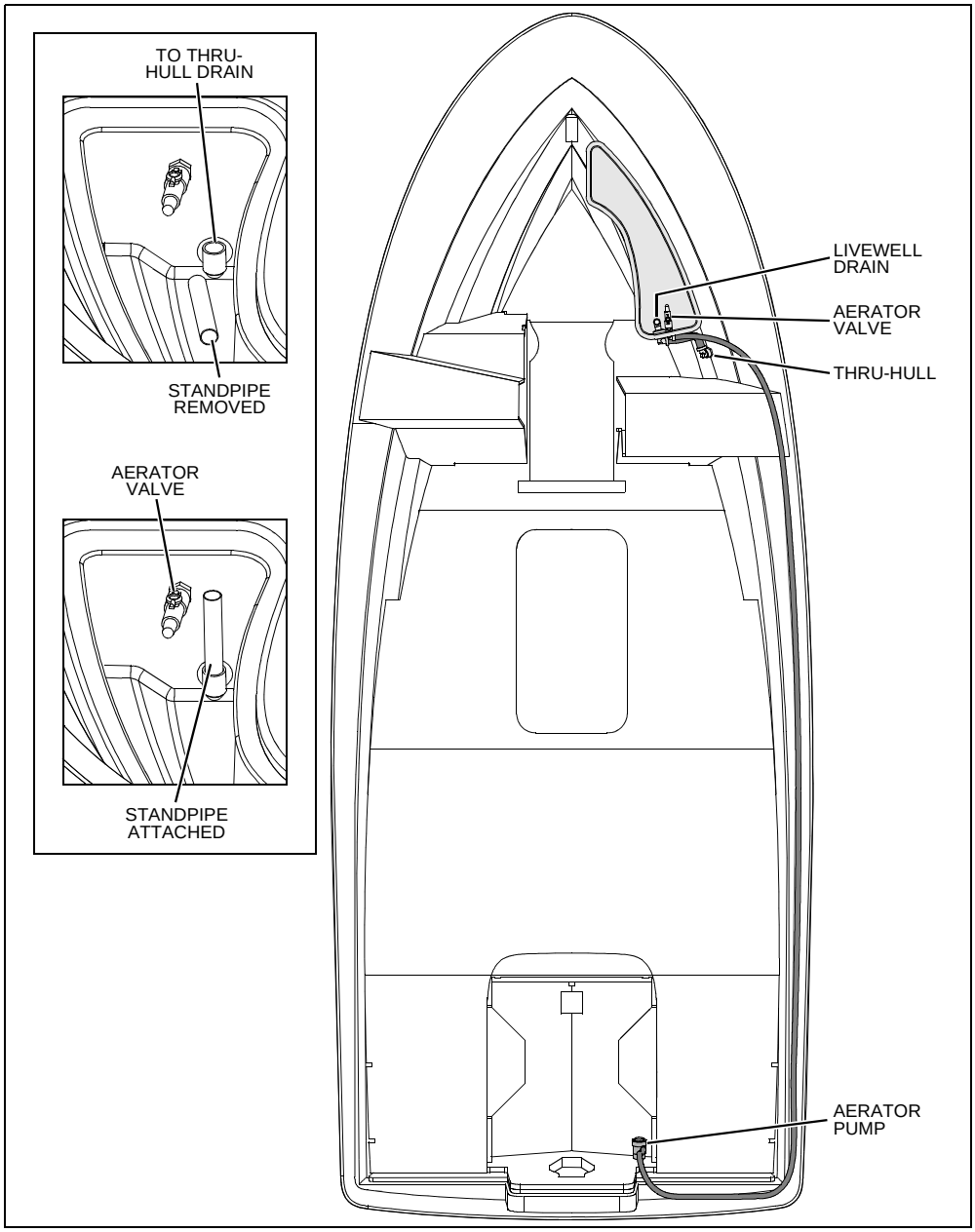

Portable Toilet

NOTICE

Check with local authorities for regulations regarding the legal use of marine head systems.

Read the manufacturer's operating instructions ***before*** using the portable toilet.

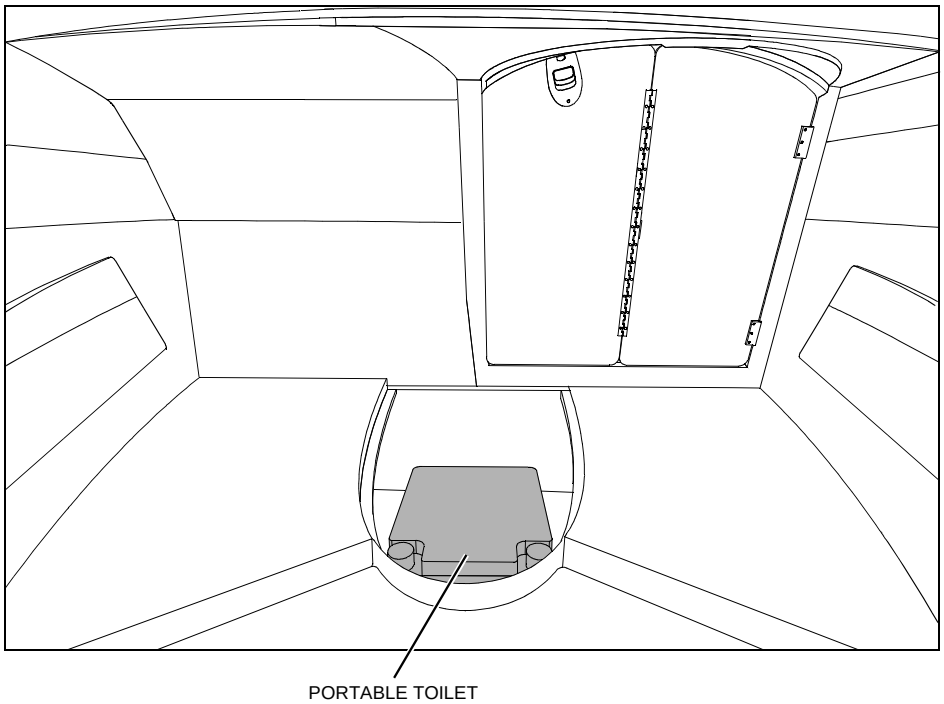

Chapter 7: Deck Equipment

Cleats & Bow/Stern Eyes

⚠ WARNING!

PERSONAL INJURY and/or PRODUCT or PROPERTY DAMAGE HAZARD!

***NEVER* lift your boat using the bow/stern eyes or the cleats.**

Read the section on towing in the *Sport Boat Owner's Manual* ***before***:

- Towing anything behind your boat.
- Being towed by another vessel.

Ski-Tow Ring

⚠ WARNING!

PERSONAL INJURY and/or PRODUCT or PROPERTY DAMAGE HAZARD!

Failure to follow these guidelines can result in injury or death:

- ***ONLY* tow water skis, wakeboards, or recreational towables.**
- **Do *NOT* tow parasails, kites, or other boats.**
- **Do *NOT* tow more than two persons at one time.**
- **Use caution with skier in tow as tow rope may snap back into cockpit when released.**

Attach the tow rope as shown in the photo.

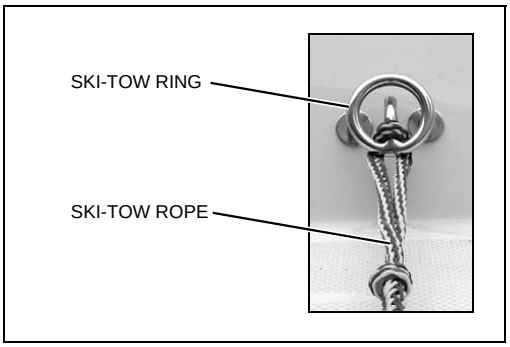

Canvas & Vinyl Tops & Enclosures

⚠ CAUTION

PRODUCT or PROPERTY DAMAGE HAZARD!

Take down and securely stow *ALL* canvas & vinyl *BEFORE* your boat is transported by road.

NOTICE

***BEFORE* cleaning and/or stowing your canvas or vinyl, read the sections later in this chapter, *Canvas Care* and *Vinyl Care*.**

NOTICE

Two people are needed for most of the tasks listed in this section.

NOTICE

Some canvas and vinyl options may not be described. Make sure your dealer explains how to install all canvas and vinyl.

192 Bimini Top (If Equipped)

1. Insert the end eyes of the main bow (A) into the hinges (B) on the windshield frame and insert the securing pins.
2. Unsnap the secondary bows (C) and pull the canvas and bows forward.
3. Insert the end eyes of the forward braces (D) into the hinges (E) on the windshield frame and insert the securing pins.
4. Insert the end eyes of the aft braces (F) into the hinges (G) and insert the securing pins.

- The jaw slides should not need to be adjusted.
- If you decide to adjust the jaw slide positions, get the correct measurements from your selling dealer.

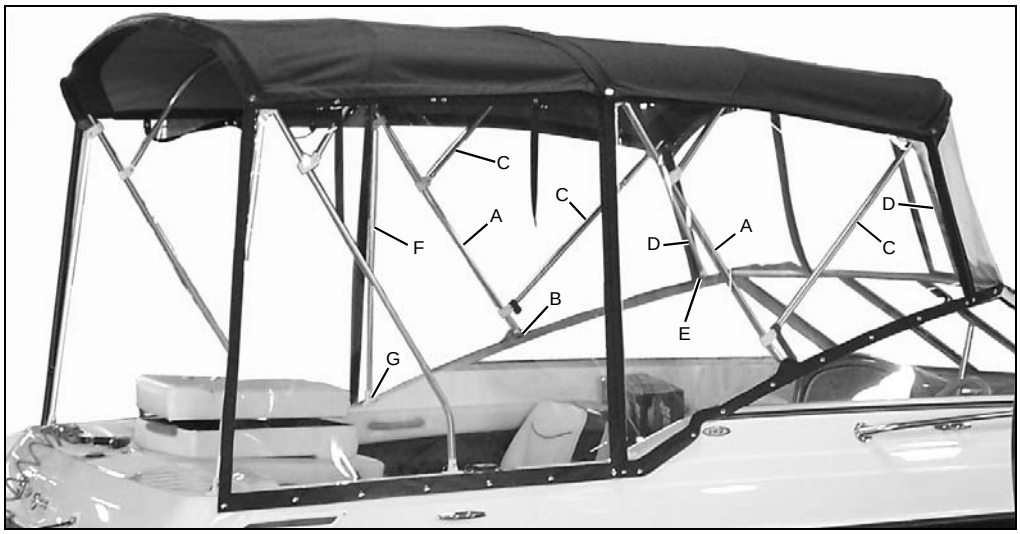

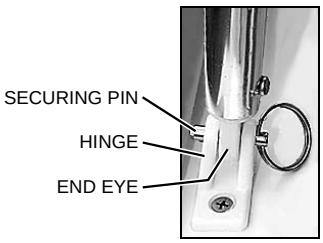

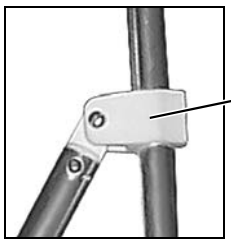

192 Aft Bimini Top (If Equipped)

1. Zip four to six inches of the aft bimini top to the forward bimini top.
2. Insert the end eyes of the main bow (A) into the hinges (B) and insert the securing pins.
3. Insert the end eyes of the aft braces (C) into the hinges (D) and insert the securing pins.
4. Finish zipping the zippers.

- The jaw slides should not need to be adjusted.
- If you decide to adjust the jaw slide positions, get the correct measurements from your selling dealer.

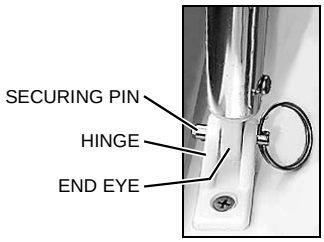

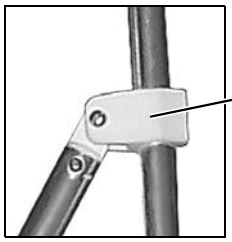

194 & 195 Bimini Top (If Equipped)

1. Slide the windshield hinges of the main bow (A) over the pre-drilled holes (B) in the windshield frames and insert the securing pins.
2. Unfold the canvas and insert the end eyes of the forward braces (C) into the forward deck hinges (D) and insert the securing pins.
3. Insert the end eyes of the aft braces (E) into the aft deck hinges (F) and insert the securing pins.

- The jaw slides (G) should not need to be adjusted.
- If you decide to adjust the jaw slide positions, obtain the correct measurements from your selling dealer.

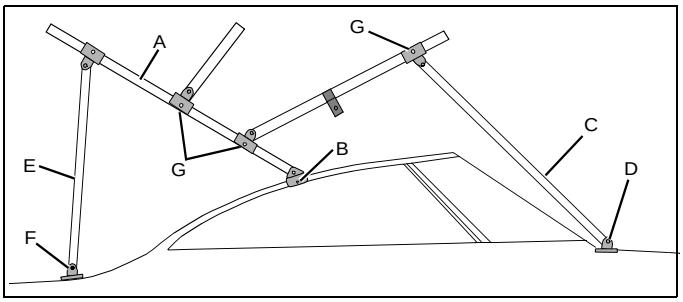

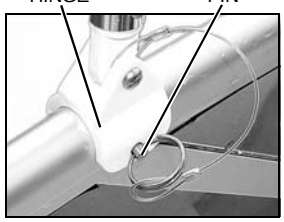

210 & 215 Convertible Top

1. Slide the windshield hinges of the main bow (A) over the pre-drilled holes (B) in the windshield frames and insert the securing pins.
2. Unfold the canvas top and snap the front edge of the top to the windshield frame (C).
3. Insert the end eyes of the aft braces (D) into the deck hinges (E) and insert the securing pins.
4. Align the secondary bow (F) with the center seam (G) of the canvas by loosening or tightening the top straps (H).

- The jaw slides (I) should not need to be adjusted.
- If you decide to adjust the jaw slide positions, obtain the correct measurements from your selling dealer.

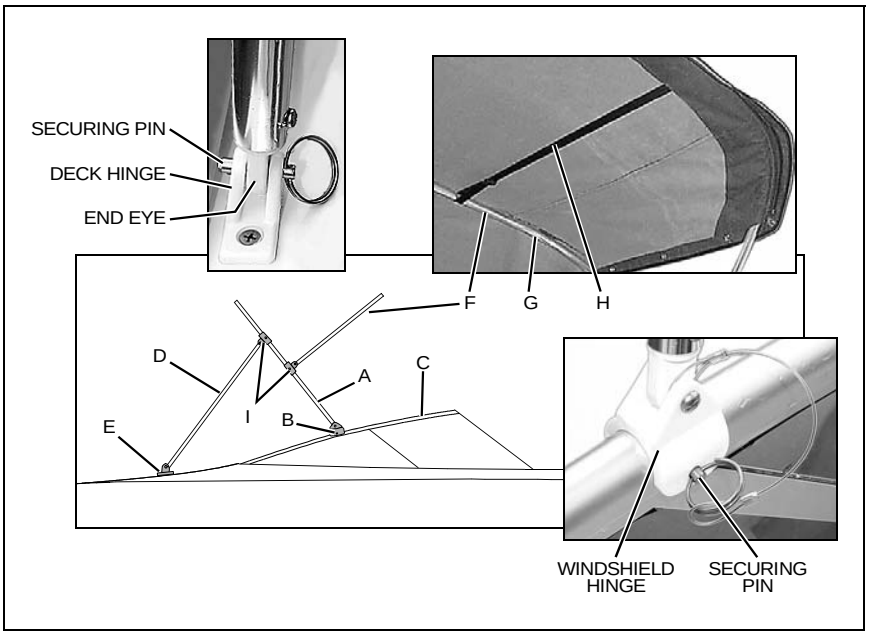

215 Bimini Top (If Equipped)

1. Slide the windshield hinges of the main bow (A) over the aft pre-drilled holes (B) in the windshield frames and insert the securing pins.
2. Unfold the canvas and slide the windshield hinges of the forward braces (C) over the forward pre-drilled holes (D) in the windshield frames and insert the securing pins.
3. Insert the end eyes of the aft braces (E) into the aft deck hinges (F) and insert the securing pins.

- The jaw slides (G) should not need to be adjusted.
- If you decide to adjust the jaw slide positions, obtain the correct measurements from your selling dealer.

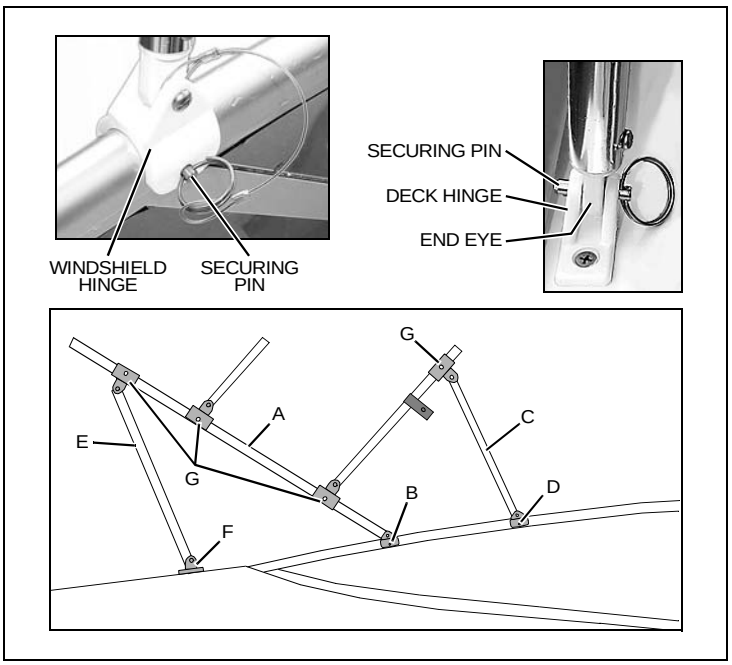

Vinyl Curtains (If Equipped)

NOTICE

When taking down the vinyl curtains, avoid socket/stud problems by using the following method to unfasten the curtain sockets from the studs on the bimini top:

- **Grasp the edge of the curtain just below each socket and roll the edge upwards. The socket should pop off easily.**

192, 194 & 195 Forward Curtain

1. Zip four to six inches of each zipper to the forward bimini top.
2. At point (A), fasten the top corner curtain studs to the bimini sockets.
3. Starting at the bottom center of the curtain and working outwards, snap the curtain to the windshield frame.
4. Finish zipping the top zippers.

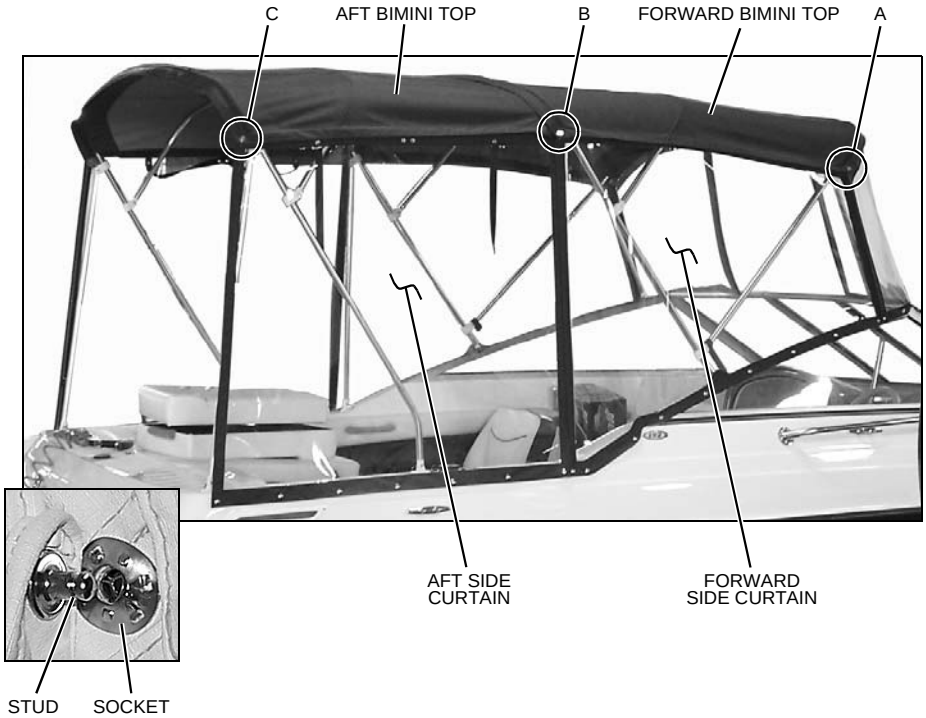

192, 194 & 195 Forward Side Curtains

1. Starting on either side, zip four to six inches of the forward side curtain to the forward bimini top and the forward curtain.
2. At point (B), fasten the forward side curtain's studs into the bimini top's sockets.
3. Start with the bottom forward snap on the forward side curtain and work your way aft snapping the forward side curtain to the windshield frame and deck.
4. Finish zipping the zippers.
5. Repeat steps one through four on the other side.

192 Aft Side Curtains

1. Starting on either side, zip four to six inches of the aft side curtain to the aft bimini top and forward side curtain.
2. At point (C), press the curtain's studs into the sockets on the aft bimini top.
3. Start with the bottom forward snap on the aft side curtain and work your way aft snapping the aft side curtain to the deck.
4. Finish zipping the zippers.
5. Repeat steps one through four on the other side.

192, 194 & 195 Aft Curtain

1. Zip four to six inches of the aft curtain to the aft bimini top and the aft side curtains.
2. Starting at the bottom center of the curtain, work your way to each side snapping the aft curtain to the deck.
3. Finish zipping all zippers.

210 & 215 Side Curtains

1. Insert the side curtain's stud into the convertible top's socket.
2. Snap the side curtain to the convertible top and the windshield frame.

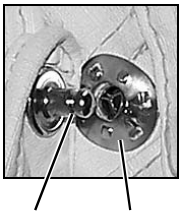

210 & 215 Aft Curtain

1. Zip four to six inches of the aft curtain to the convertible top.
2. Zip the aft curtain to the side curtains.
3. Snap the aft curtain to the deck.

Canvas Care (see also 'Clear Vinyl Care' on next page)

- After each use, especially in saltwater, rinse the canvas with cold freshwater.
- ***Before*** stowing, let the canvas air-dry completely.
- The canvas can be rolled or folded for stowage.

Cleaning the Canvas

⚠ CAUTION

***NEVER* use detergents when washing the canvas. Detergents can destroy the water repellency, and mildew/UV resistant finish of your canvas.**

Regularly clean the canvas to prevent dirt, pollen, and etc. from embedding in the fabric. Generally, it is easiest to wash the canvas while it is installed on your boat.

- Use a soft-bristled brush to remove all dust and loose dirt.

1. Hose down the canvas with freshwater.
2. Gently wash the canvas with a solution of lukewarm water (no more than 100° F) and non-detergent soap, such as Lux or Ivory Flakes.
3. Rinse thoroughly to remove the soap.
4. ***Before*** stowing, let the canvas dry completely.

Stubborn Stains

⚠ CAUTION

- **Soaking in bleach solutions may remove the waterproof finish of the fabric and may also decrease the life of the polyester thread used in the canvas.**
- **If needed, a water repellent treatment should be reapplied to your canvas. Ask your dealer about the treatments available for your boat's canvas.**

Some stubborn stains may resist normal washing and you can try the methods below. However, these methods may remove the waterproof finish of the fabric and may also decrease the life of the polyester thread used in the canvas. Reapply a water repellent treatment as needed.

Method 1

1. Add 1/8 cup (2 oz.) of **non-chlorine** bleach to one gallon of water and mix thoroughly.
2. Thoroughly wet the canvas and then gently scrub the stained area with the weak bleach solution.
3. Rinse with cold water to remove all of the solution.

Method 2

1. Add 1/2 cup (4 oz.) of **non-chlorine** bleach and 1/2 cup (4 oz.) Ivory Flakes to one gallon of water and mix thoroughly.
2. Soak the canvas in this solution for about 20 minutes.
3. Rinse with cold water to remove all of the solution.

Clear Vinyl Care

⚠ CAUTION

- ***NEVER* store the clear vinyl pieces wet, as this will cause a milky film to develop.**
- ***NEVER* fold or crease the clear vinyl pieces as cracking will occur.**
- **Clear vinyl is *NOT* intended for use when your boat is in storage or being moored.**
- **Clear vinyl does *NOT* hold up well against ultraviolet rays.**
- **Under direct sunlight conditions, do *NOT* let the clear vinyl touch the framework. The framework radiates heat and can burn the clear vinyl.**

- After each use, especially in saltwater, rinse the clear vinyl with cold freshwater.
- ***Before*** stowing, the clear vinyl must be completely dry. Air-drying is best, but you can also carefully dry the vinyl with a chamois or soft cotton cloth.
- The clear vinyl can be rolled or laid out flat for stowage.
- ***Never*** fold or crease the clear vinyl parts as cracking will occur.

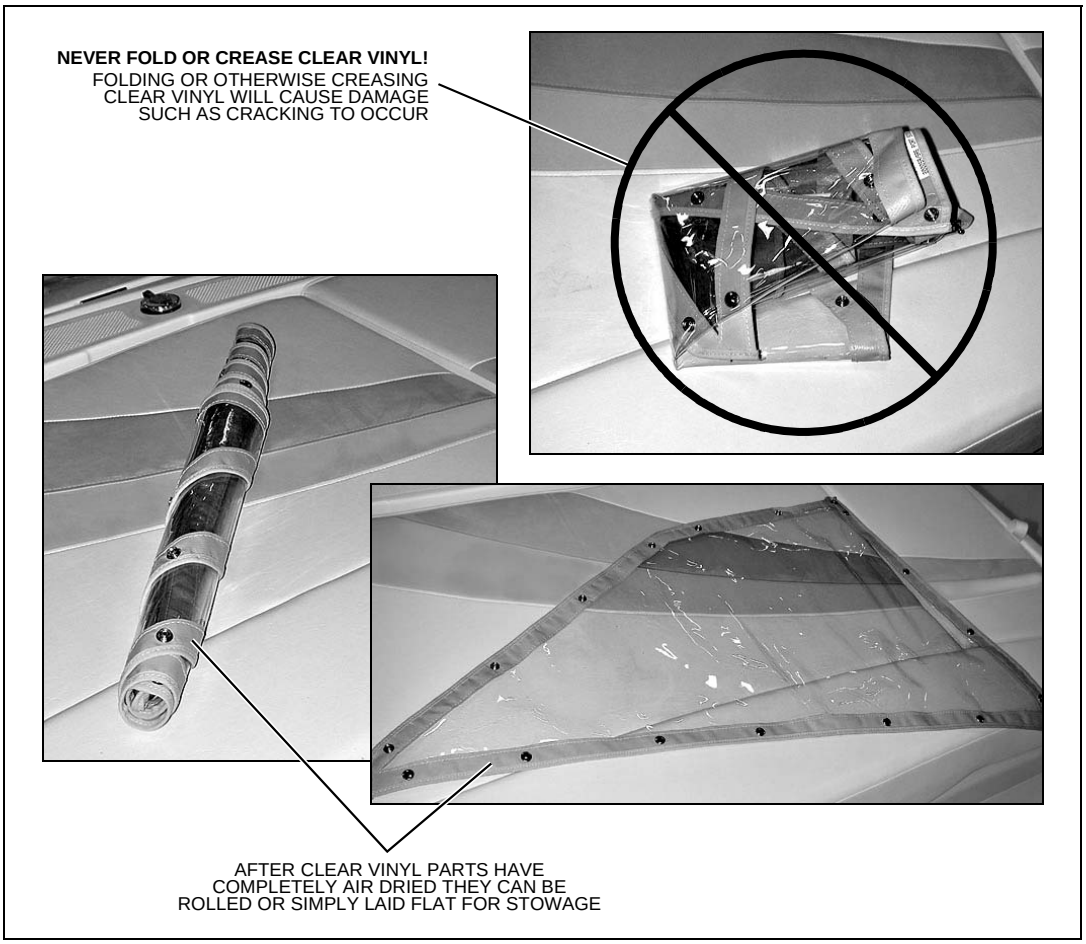

Cleaning Clear Vinyl

Regularly clean the clear vinyl to prevent dirt, pollen, and etc. from marring the surface. Generally, it is easiest to clean the clear vinyl while it is installed on your boat.

1. Hose down the clear vinyl with freshwater.
2. Using a soft cotton cloth **(paper towels are abrasive and should *never* be used on clear vinyl)**, gently wash the clear vinyl with soap and water.
3. Rinse thoroughly to remove the soap.
4. ***Before*** stowing, the clear vinyl must be completely dry. Air-drying is best, but you can also carefully dry the vinyl with a chamois or soft cotton cloth.

- Ask your dealer about products available to keep the clear vinyl polished and looking new.

Chapter 8: Entertainment Systems

Audio Equipment

NOTICE

AM radio reception may be impaired when the engine is running.

Read the manufacturer's instruction manual ***before*** using the audio equipment.

Chapter 9: Convertible Seats, Beds, & Tables

Sleeper Seats

- The sleeper seats can be adjusted fore and aft in the upright, operating position.
- The seat bottoms adjust into backrests when the seats are in the lounge position.

Operating Positions

To slide the seat forward:

1. Lift the forward seat at point (A).
2. Push down on the forward seat at point (B) and pull the seat forward.
3. Lock the forward seat into the desired position by pushing down at point (A).
4. Lift the aft seat at point (C).
5. Push down on the aft seat at point (D) and push the seat forward until the aft seat back is flush against the forward seat back.
6. Lock the aft seat into position by pushing down at point (C).

To slide the seat aft, repeat the steps above, but start with the aft seat.

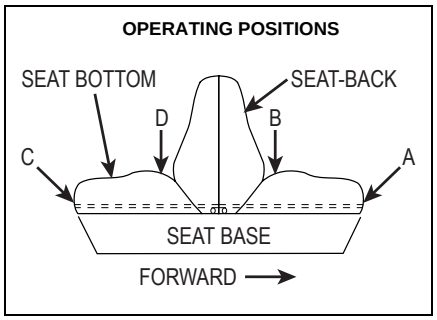

Lounge Positions

To adjust into the flat lounge position:

1. Lift the forward seat at point (A).
2. Push down on the forward seat at point (B) and pull the seat forward until the seat back and bottom are flat.
3. Lift the aft seat at point (C).
4. Push down on the aft seat at point (D) and pull the seat aft until the seat back and bottom are flat.

To adjust into the chaise lounge position:

1. Lift the forward or aft seat bottom at point (A or C) and push the seat bottom down into the locked position.
2. To lower the seat bottom, lift the seat at point (A or C). Drop the seat bottom flat while holding the seat down at point (E).

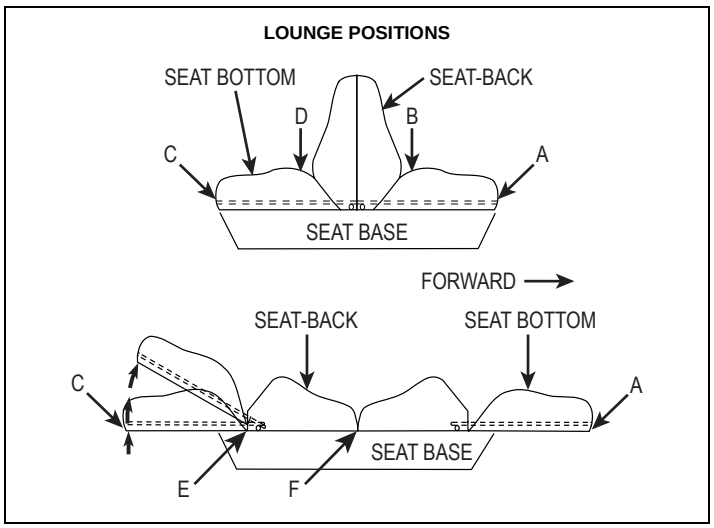

To return the seats to the operating position:

1. Lift the seat backs at point (F) and push down on the back edge of the seat bottom (B) and then seat bottom (D).
2. Push the seat bottoms towards the center of the seat until the seat backs are flush against each other and locked into place.

Jump Seat To Sunlounge Conversion

⚠ DANGER!

PERSONAL SAFETY HAZARD!

***NEVER* allow anyone to occupy the aft sunlounge cushions when the engine is running.**

192, 194 & 195 Conversion

1. Remove the jump seats (A) by sliding them forward.

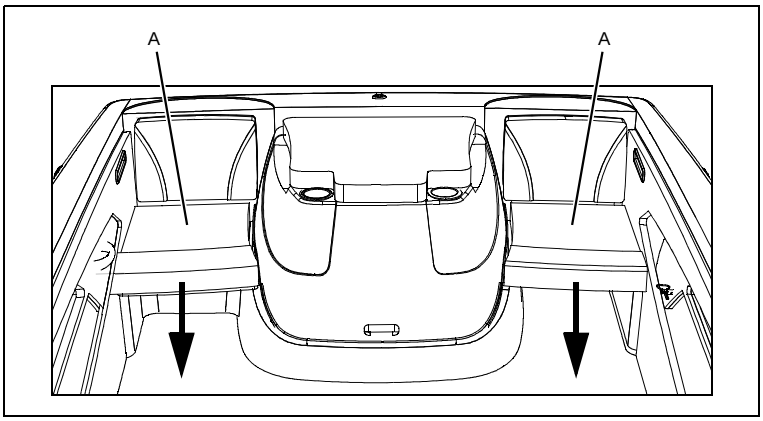

2. Slide the lounge support inserts (B) into the lounge support slots (C) on each side.

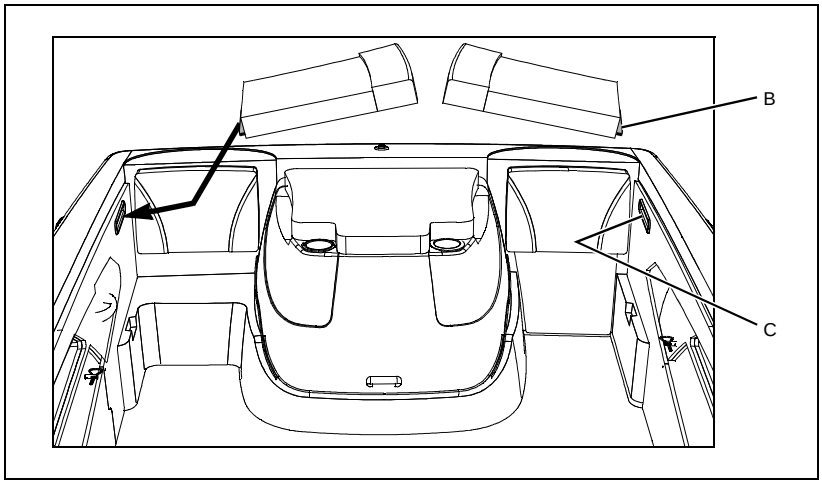

3. Firmly press down on the inboard side of each jump seat until they rest firmly on the motorbox ledges.

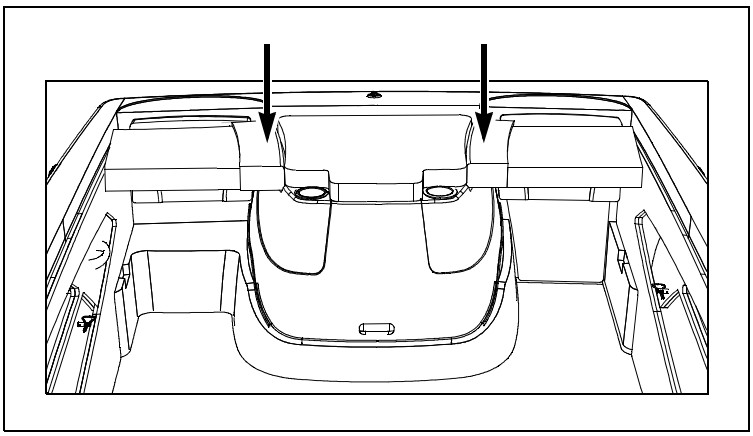

210 & 215 Conversion

1. Remove the jump seats (A) by sliding them forward.

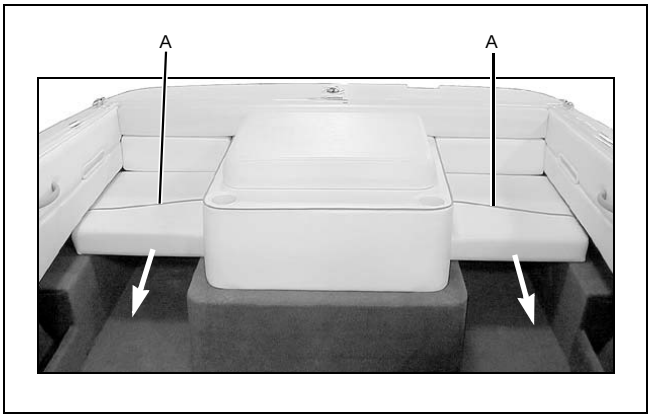

2. Slide the lounge support inserts (B) into the lounge support slots (C).

3. Firmly press down on the inboard side of each jump seat until they rest firmly on the motorbox ledges.

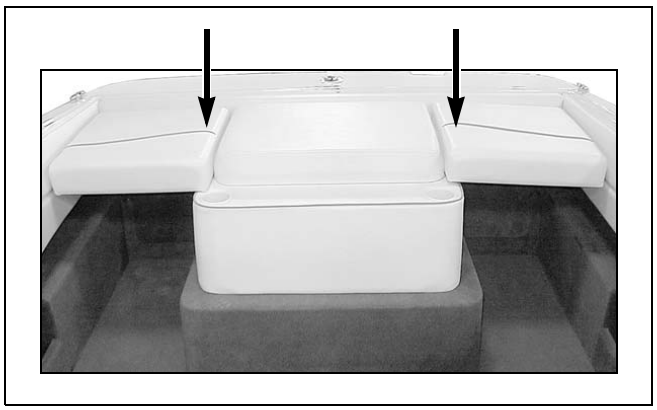

Chapter 10: Lights

Care & Maintenance

All of the lights installed on your boat are of top quality, but you should be aware that failure may periodically occur for a variety of reasons:

1. There may be a blown fuse - *replace the fuse*.
2. The bulb may be burned out - *carry spare bulbs for replacement*.
3. A wire may be damaged or may have come loose - *repair as required*.
4. The bulb base may be corroded - *clean the base and coat it with non-conductive electrical lubricant*.

Interior & Exterior Lights

⚠ CAUTION

- **Be conservative in the use of battery power.**
- **Prolonged use of cabin interior lights (overnight) *WILL* result in a drained battery.**

- The lights are powered by your boat's 12-volt DC system.
- The battery switch ***must*** be turned ***On*** for the lights to work.

Navigation Lights

⚠ CAUTION

Avoid the storage of gear where it would block navigation lights from view.

NOTICE

Running lights are legally required to show boat direction and right-of-way at night.

Spotlight (194 Only) (If Equipped)

Read the spotlight operating instructions ***before*** using the spotlight.

Chapter 11: Electrical System

⚠ DANGER!

EXTREME FIRE, SHOCK and EXPLOSION HAZARD!

- **To minimize the risks of fire and explosion, *NEVER* install knife switches or other arcing devices in the fuel compartment.**
- ***NEVER* substitute automotive parts for marine parts. Marine electrical, ignition, and fuel system parts were designed and manufactured to comply with rules and regulations that minimize risks of fire and explosion.**
- **Do *NOT* modify the electrical systems or relevant drawings.**
- **Have qualified personnel install batteries and/or perform electrical system maintenance.**
- **Make sure that *ALL* battery switches are turned *Off BEFORE* performing any work in the engine spaces.**

⚠ WARNING!

FIRE and EXPLOSION HAZARD!

Fuel vapors can explode! *BEFORE* electrical system maintenance or activation of electrical devices:

1. **Check the bilge areas for fuel vapors or leaking fuel. If you see leaking fuel or smell fuel vapors:**
   a. **Do *NOT* start the engine, do *NOT* turn *On* any electrical devices, extinguish *ALL* cigarettes, cigars, and other sources of flame or ignition.**
   b. **Get everyone off your boat.**
   c. **Get trained help to find and fix the problem.**
2. **Run the bilge blower(s) for at least four minutes prior to engine starting, electrical system maintenance, or activation of electrical devices.**

⚠ CAUTION

SHOCK and ELECTRICAL SYSTEM DAMAGE HAZARD!

When the engine is running, *NEVER* turn *Off* the battery switch or disconnect the battery cables. Doing either could cause damage to your boat's engine and/or electrical system.

NOTICE

Electrical connections are prone to corrosion. To reduce corrosion-caused electrical problems:

- **Keep *ALL* electrical connections clean.**
- **Apply a spray-on protectant that is designed to protect connections from corrosion.**

12-Volt DC System

Battery(s)

- The battery(s) supplies electricity for lights, 12-volt accessories and engine starting.
- The *Electrical* section of *Chapter 8* in the *Sport Boat Owner's Manual* provides battery care and maintenance instructions.

Battery Switch (If Equipped with Two Batteries)

⚠ CAUTION

SHOCK and ELECTRICAL SYSTEM DAMAGE HAZARD!

When the engine is running, *NEVER* turn *Off* the battery switch or disconnect the battery cables. Doing either could cause damage to your boat's engine and/or electrical system components.

- Standby-loads, such as the automatic bilge pumps and the stereo memory, are not affected by the battery switch since they are wired directly to the batteries (see the *Wiring Diagrams* section of this chapter for more details).
- Turn the battery switch to the ***Off*** position whenever your boat will be unoccupied for long periods of time.

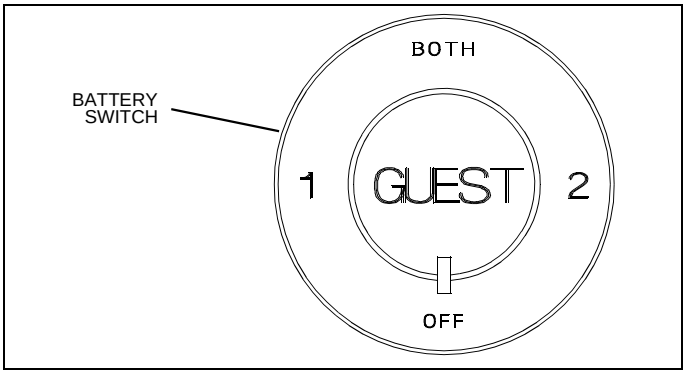

Battery Switch Positions

NOTICE

Since your boat's batteries were installed by your dealer, the battery switch positions listed below may vary. Make sure your selling dealer fully explains how to use the battery switches.

BATTERY SWITCH POSITIONS	ENGINE STARTING	ACCESSORIES & LIGHTS	ENGINE ALTERNATOR
POSITION 1	Battery 1 provides starting power	Battery 1 provides power for accessories and lights	Charges battery 1
POSITION 2	Battery 2 provides starting power	Battery 2 provides power for accessories and lights	Charges battery 2
BOTH POSITION	BOTH batteries Provide starting power	BOTH batteries provide power for accessories and lights (not advised unless engine is running)	Charges BOTH batteries

Fuses

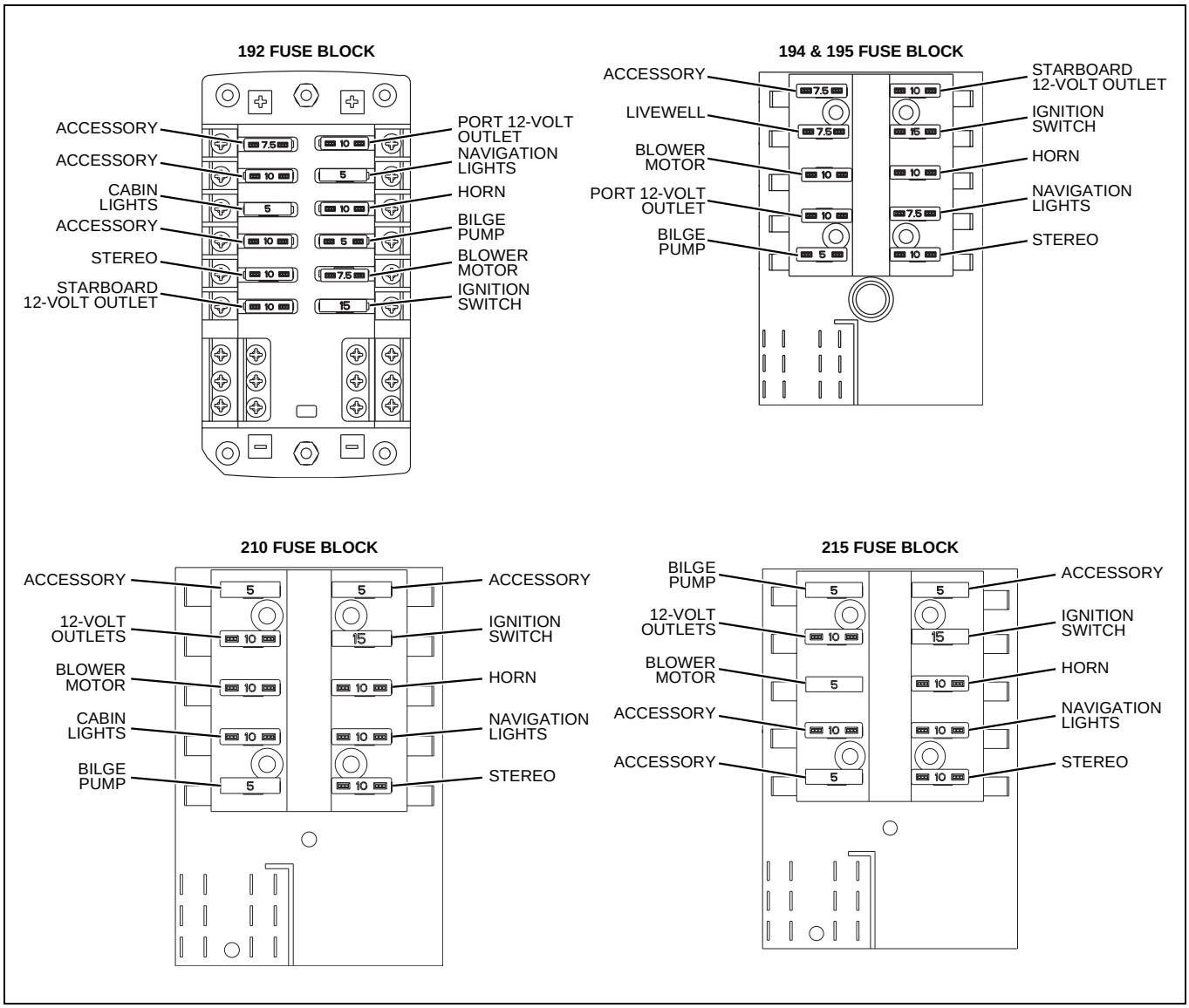

- Fuses for the engine and main accessory power are on the fuse block under the helm dash.
- For the location of the 12-volt DC fuse block, see the *Component Locations* section in *Chapter 2* of this *supplement*.
- Some equipment may have secondary fuse protection at the unit, or at the battery.

12-Volt DC Accessory Outlets

⚠ CAUTION

Do *NOT* use the 12-volt DC accessory outlet with a cigarette or cigar lighter. High temperatures may melt the outlet.

- The outlets can be used with any 12-volt device which draws 10-amps or less.
- Each 12-volt DC accessory outlet is protected by a 10-amp fuse on the fuse block.
- For the locations of the 12-volt DC accessory outlets, see the *Component Locations* section in *Chapter 2* of this *supplement*.

Alternator

The alternator will keep the battery properly charged when the engine is running at, or above, cruising speeds.

Electrical Routings

12-Volt DC Hull Harness - 192, 194 & 195

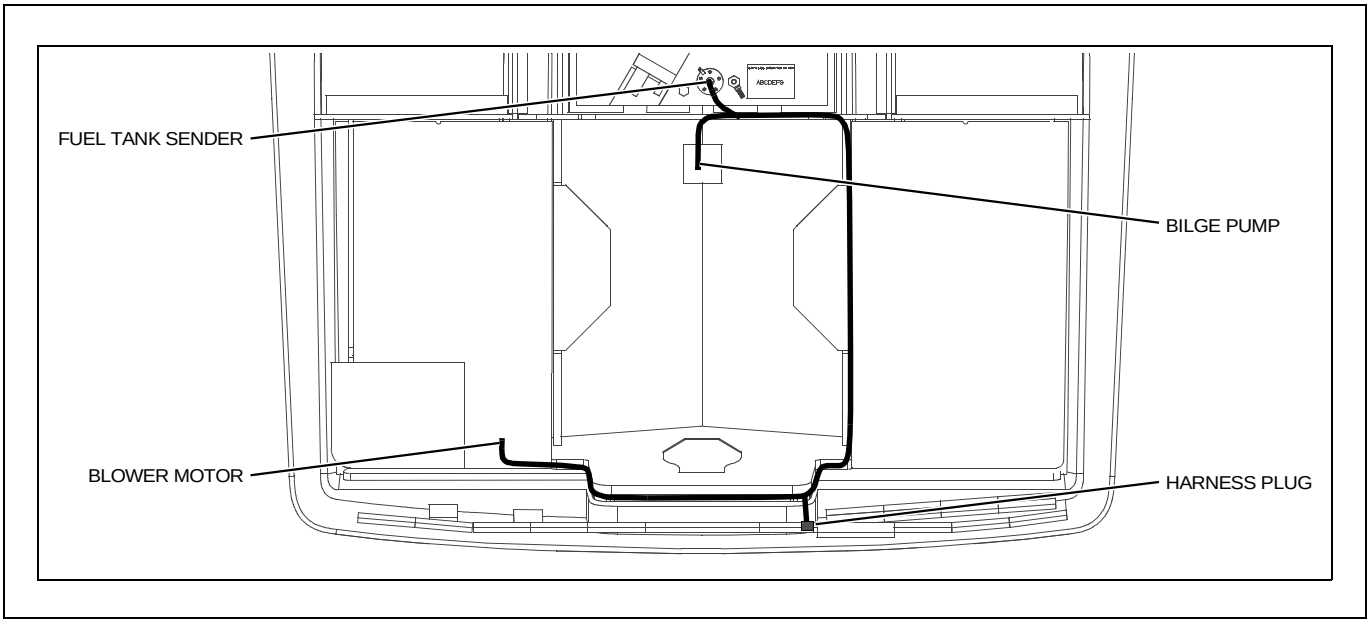

12-Volt DC Hull Harness - 210 & 215

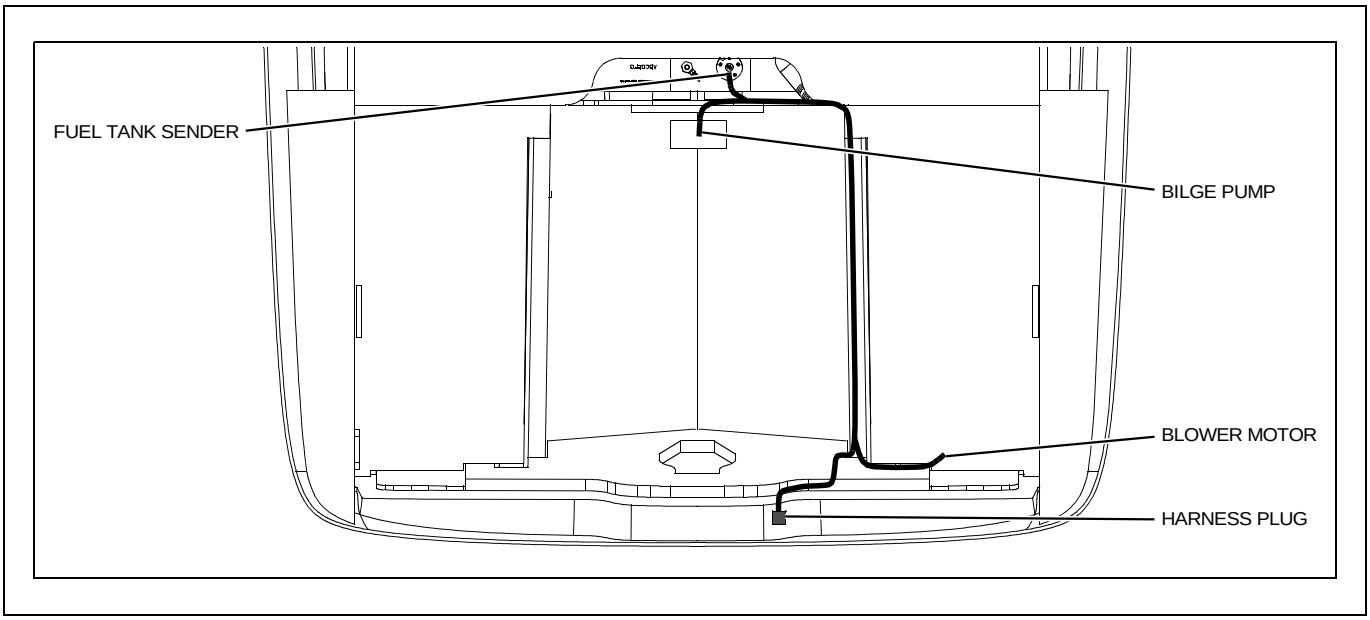

12-Volt DC Deck Harness - 192

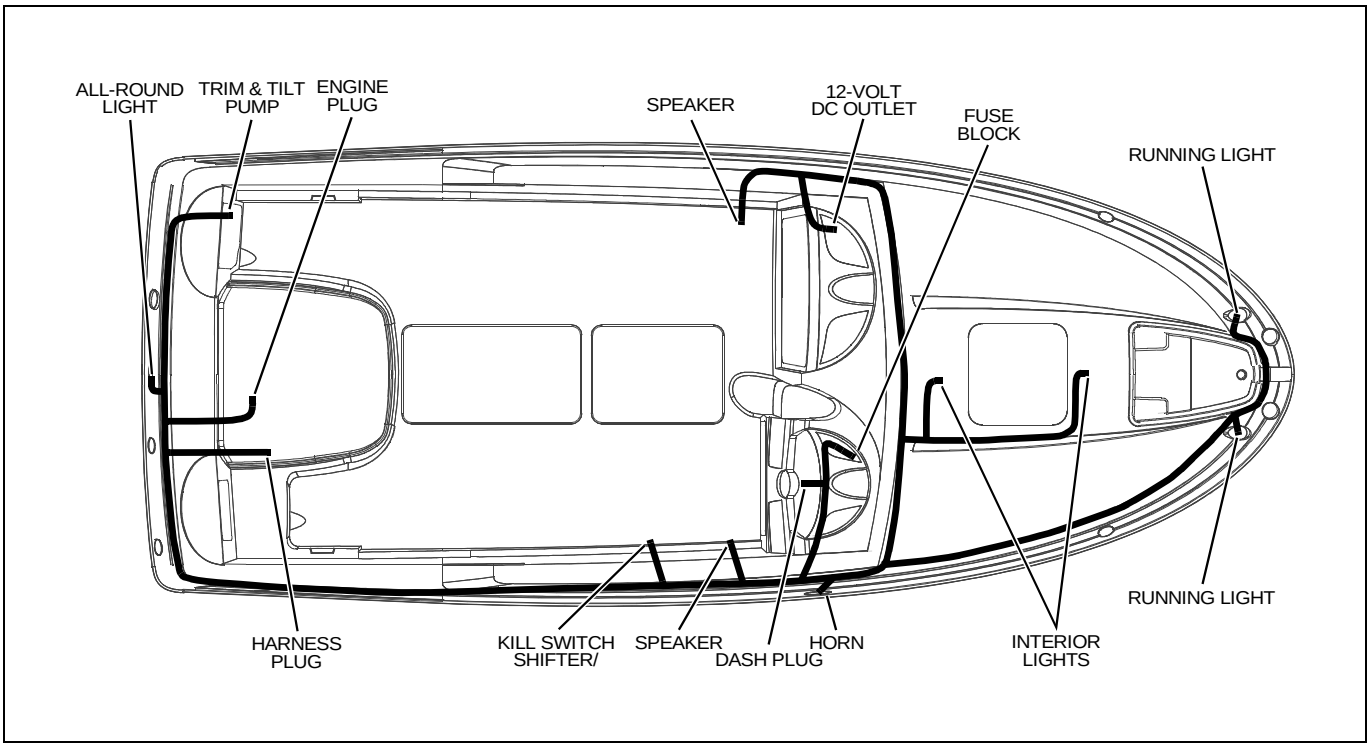

12-Volt DC Deck Harness - 194 & 195

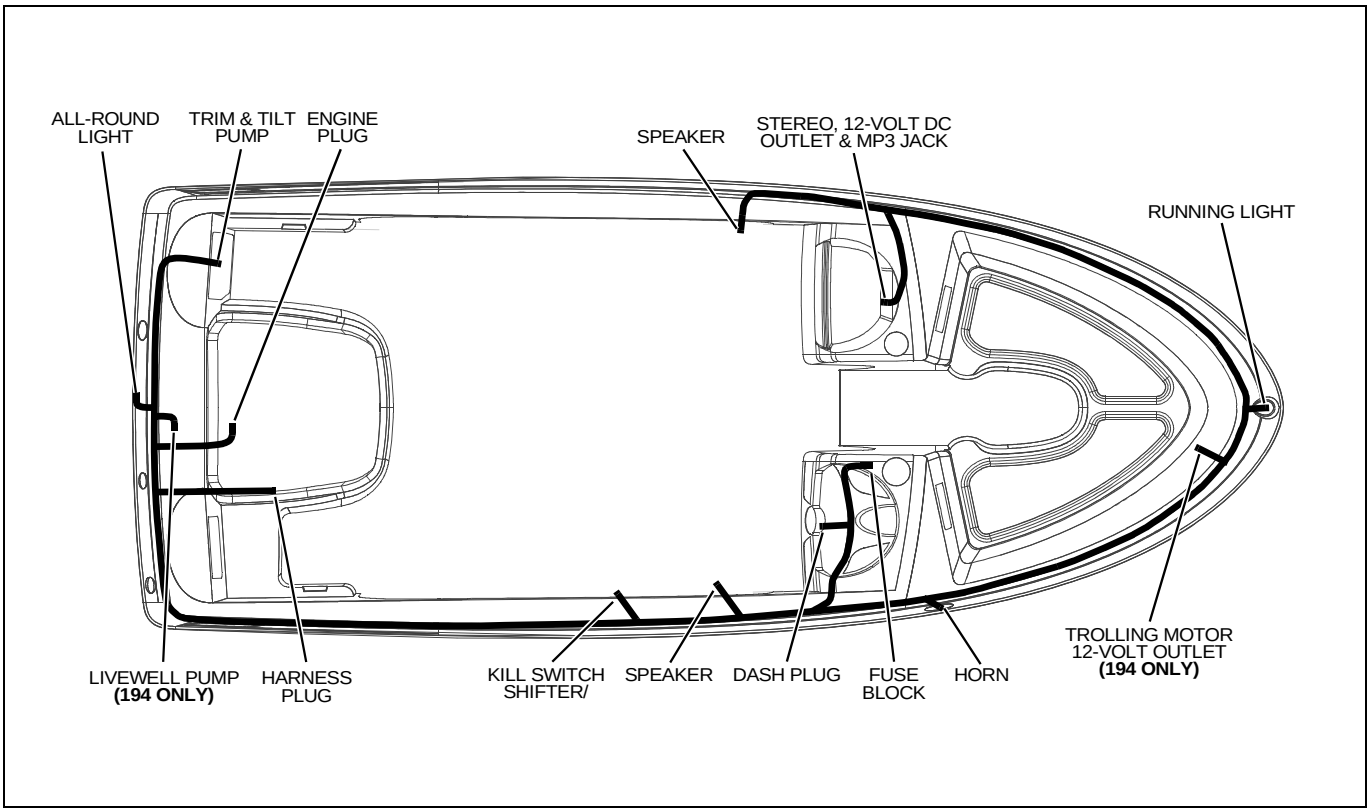

12-Volt DC Deck Harness - 210

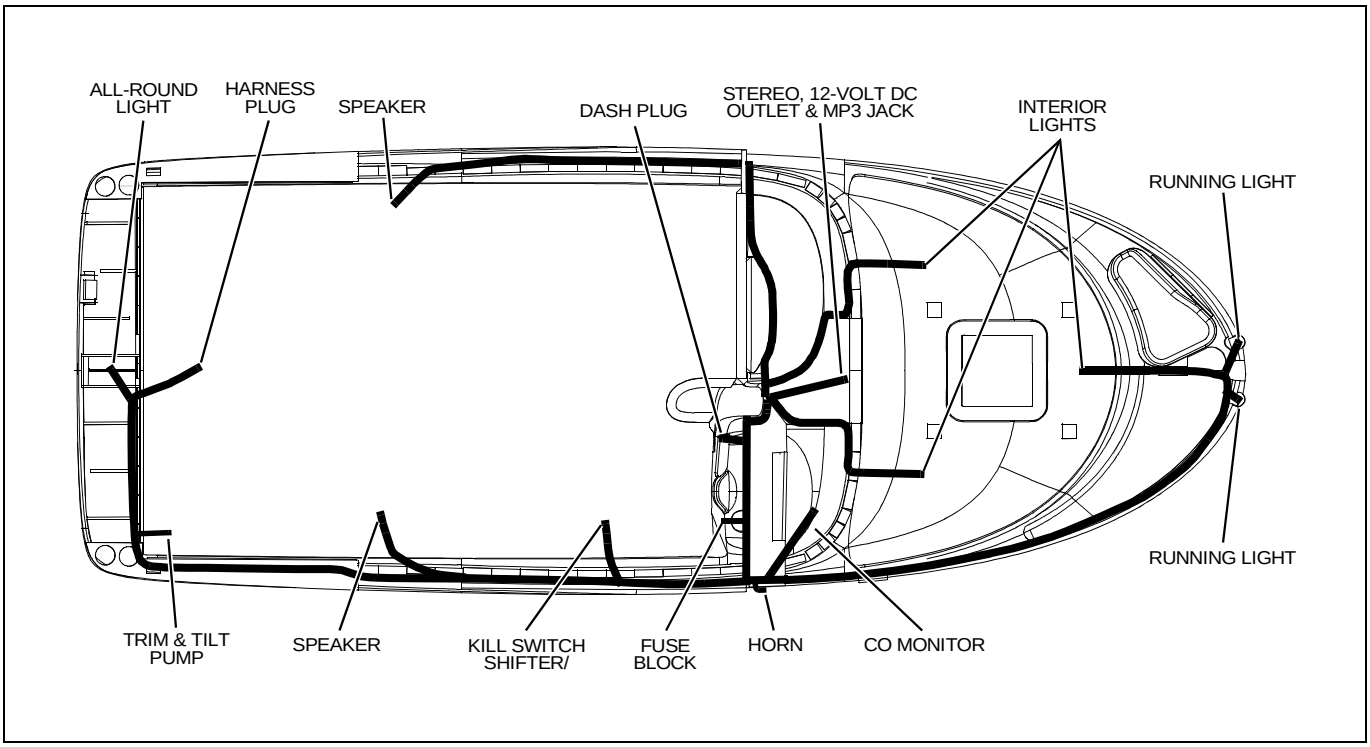

12-Volt DC Deck Harness - 215

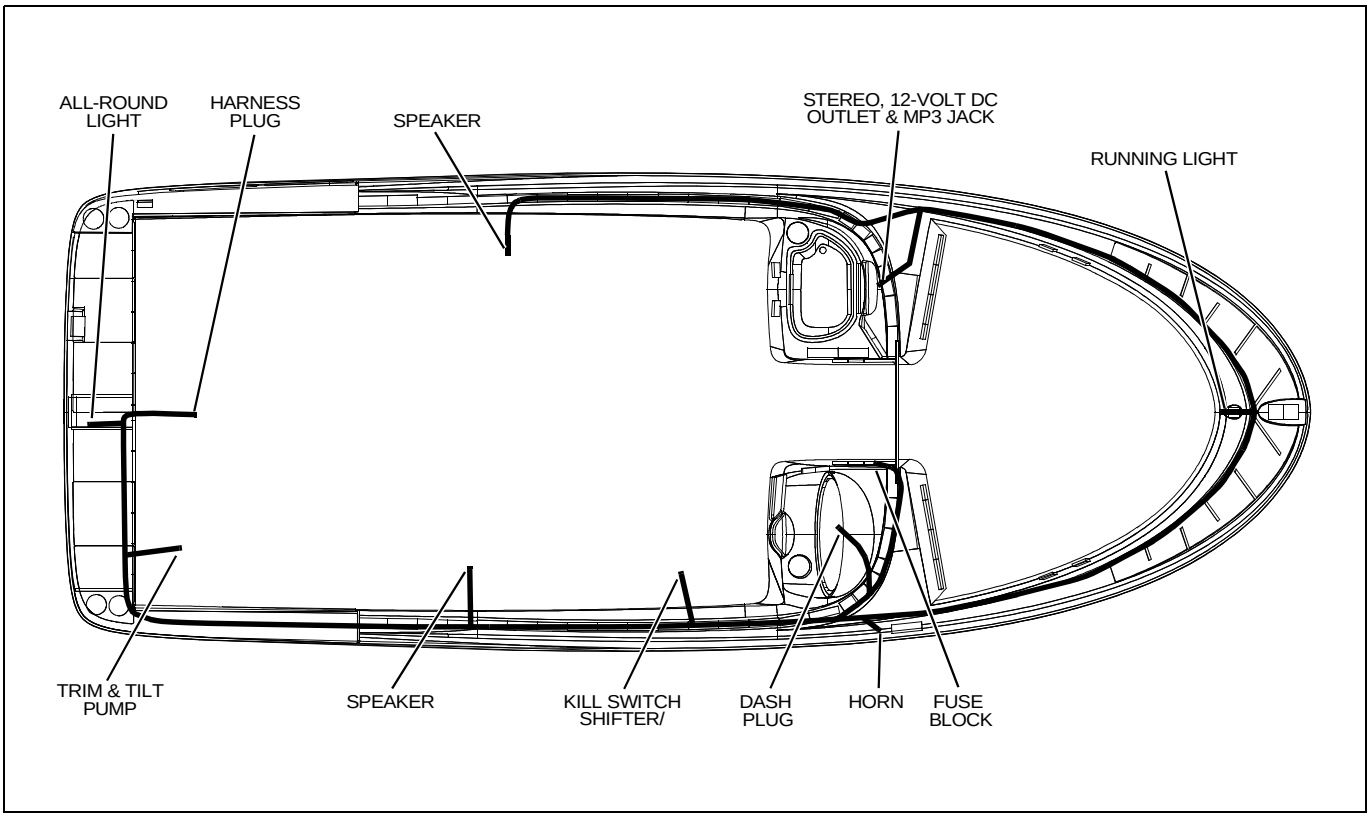

Battery Cable Routings - 192, 194 & 195

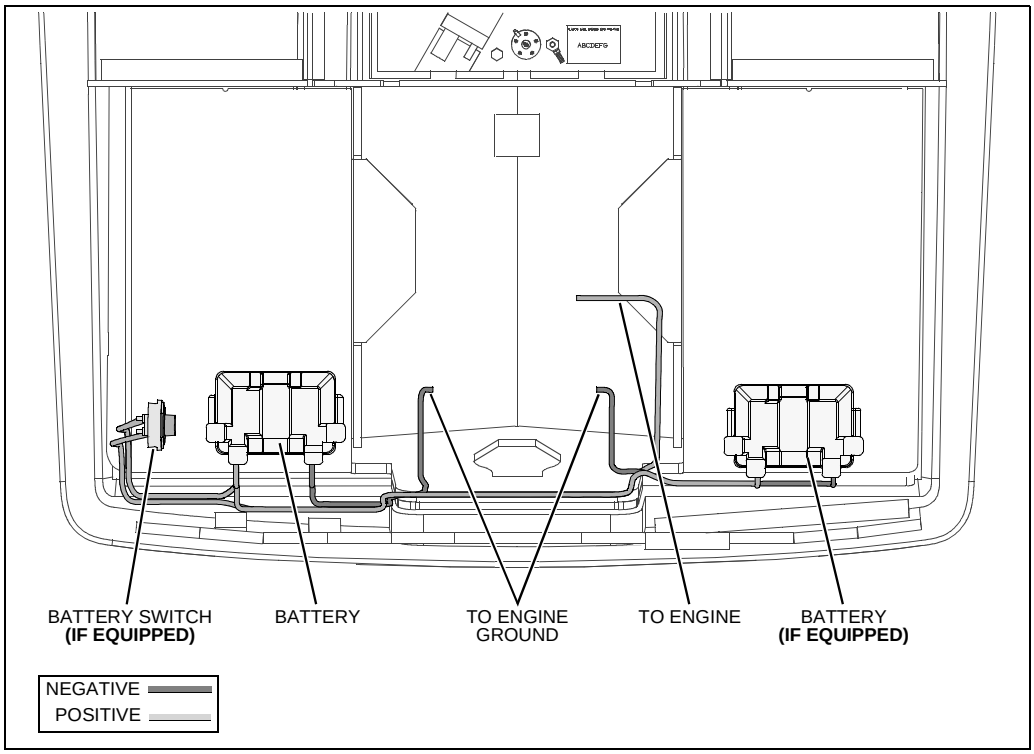

Battery Cable Routings - 210 & 215

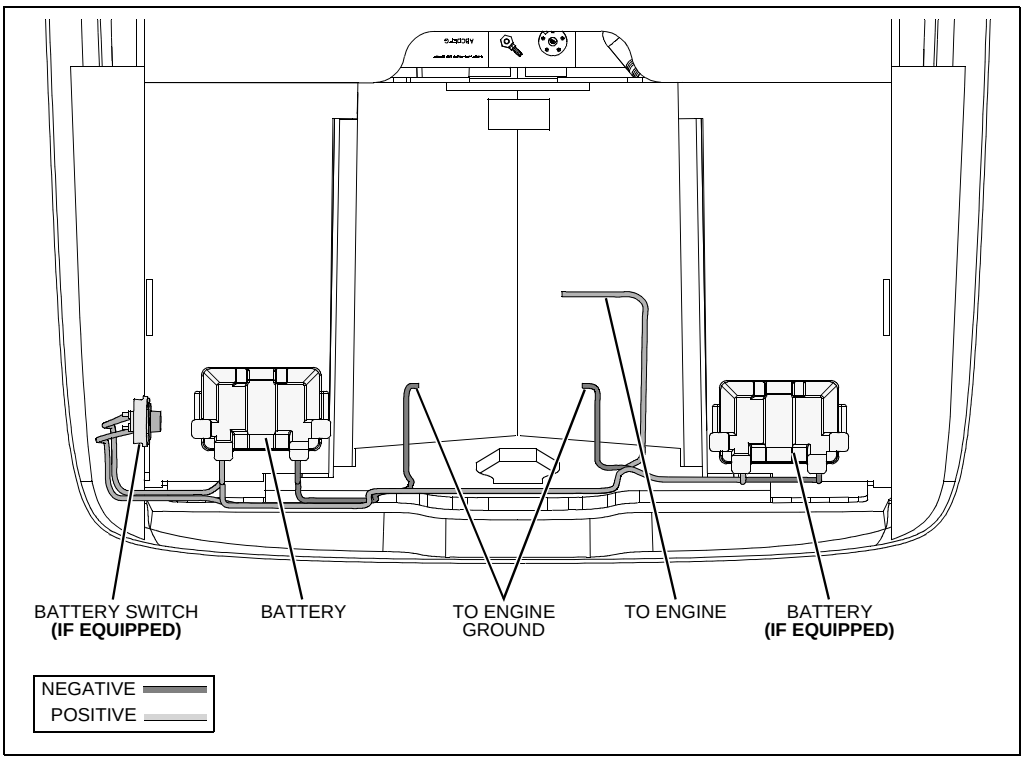

Wiring Diagrams

192

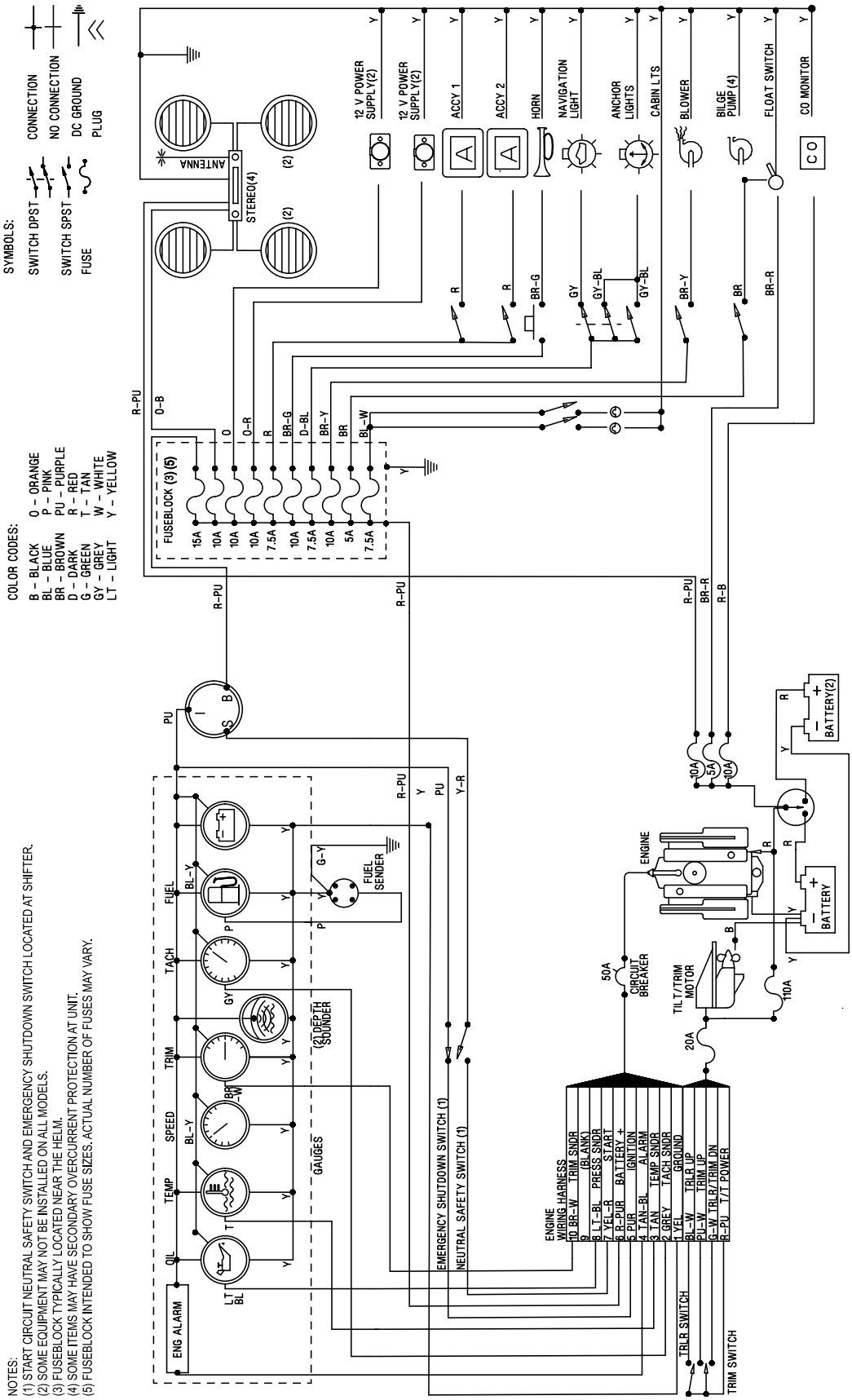

194 & 195

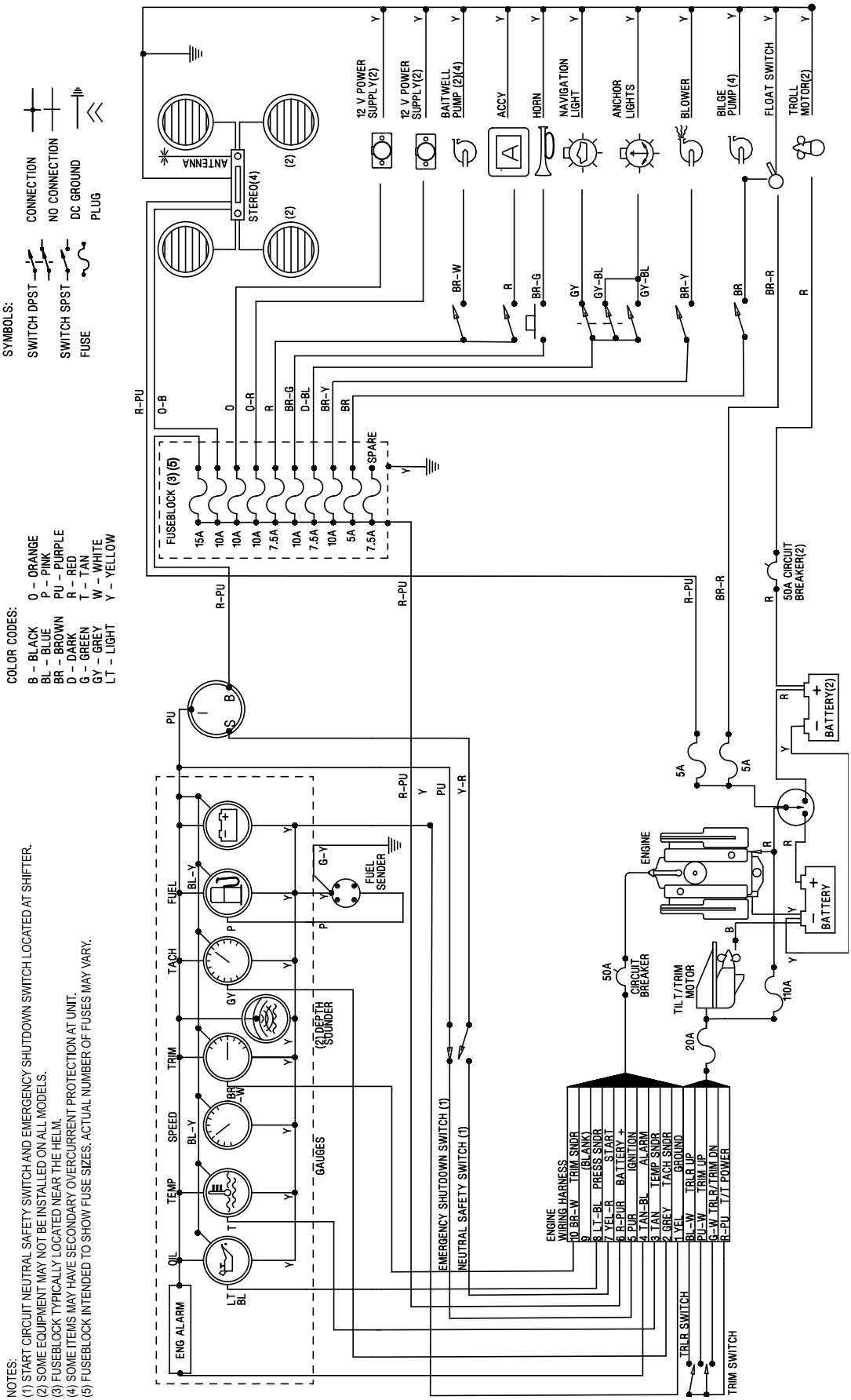
SYMBOLS:
SWITCH DPST
SWITCH SPST
FUSE
CONNECTION
NO CONNECTION
DC GROUND
PLUG
COLOR CODES:
B – BLACK
BL – BLUE
BR – BROWN
D – DARK
G – GREEN
GY – GREY
LT – LIGHT
O – ORANGE
P – PINK
PU – PURPLE
R – RED
T – TAN
W – WHITE
Y – YELLOW
NOTES:
(1) START CIRCUIT NEUTRAL SAFETY SWITCH AND EMERGENCY SHUTDOWN SWITCH LOCATED AT SHIFTER.
(2) SOME EQUIPMENT MAY NOT BE INSTALLED ON ALL MODELS.
(3) FUSEBLOCK TYPICALLY LOCATED NEAR THE HELM.
(4) SOME ITEMS MAY HAVE SECONDARY OVERCURRENT PROTECTION AT UNIT.
(5) FUSEBLOCK INTENDED TO SHOW FUSE SIZES. ACTUAL NUMBER OF FUSES MAY VARY.
ANTENNA
STEREO(4)
(2)
12 V POWER SUPPLY(2)
BAITWELL PUMP (2)(4)
ACCY
HORN
NAVIGATION LIGHT
ANCHOR LIGHTS
BLOWER
BILGE PUMP (4)
FLOAT SWITCH
TROLL MOTOR(2)
FUSEBLOCK (3)(5)
15A
10A
7.5A
5A
SPARE
50A CIRCUIT BREAKER(2)
BATTERY(2)
BATTERY
ENGINE
FUEL SENDER
(2) DEPTH SOUNDER
GAUGES
ENG ALARM
OIL
TEMP
SPEED
TRIM
TACH
FUEL
50A CIRCUIT BREAKER
TILT/TRIM MOTOR
20A
10A
EMERGENCY SHUTDOWN SWITCH (1)
NEUTRAL SAFETY SWITCH (1)
ENGINE WIRING HARNESS
10 BR–W TRIM SNDR
9 (BLANK)
8 LT–BL PRESS SNDR
7 YEL–R START
6 R–PUR BATTERY +
5 PUR IGNITION
4 TAN–BL ALARM
3 TAN TEMP SNDR
2 GREY TACH SNDR
1 YEL GROUND
BL–W TRLR UP
PU–W TRIM UP
G–W TRLR/TRIM DN
R–PU T/T POWER
TRLR SWITCH
TRIM SWITCH

210 & 215

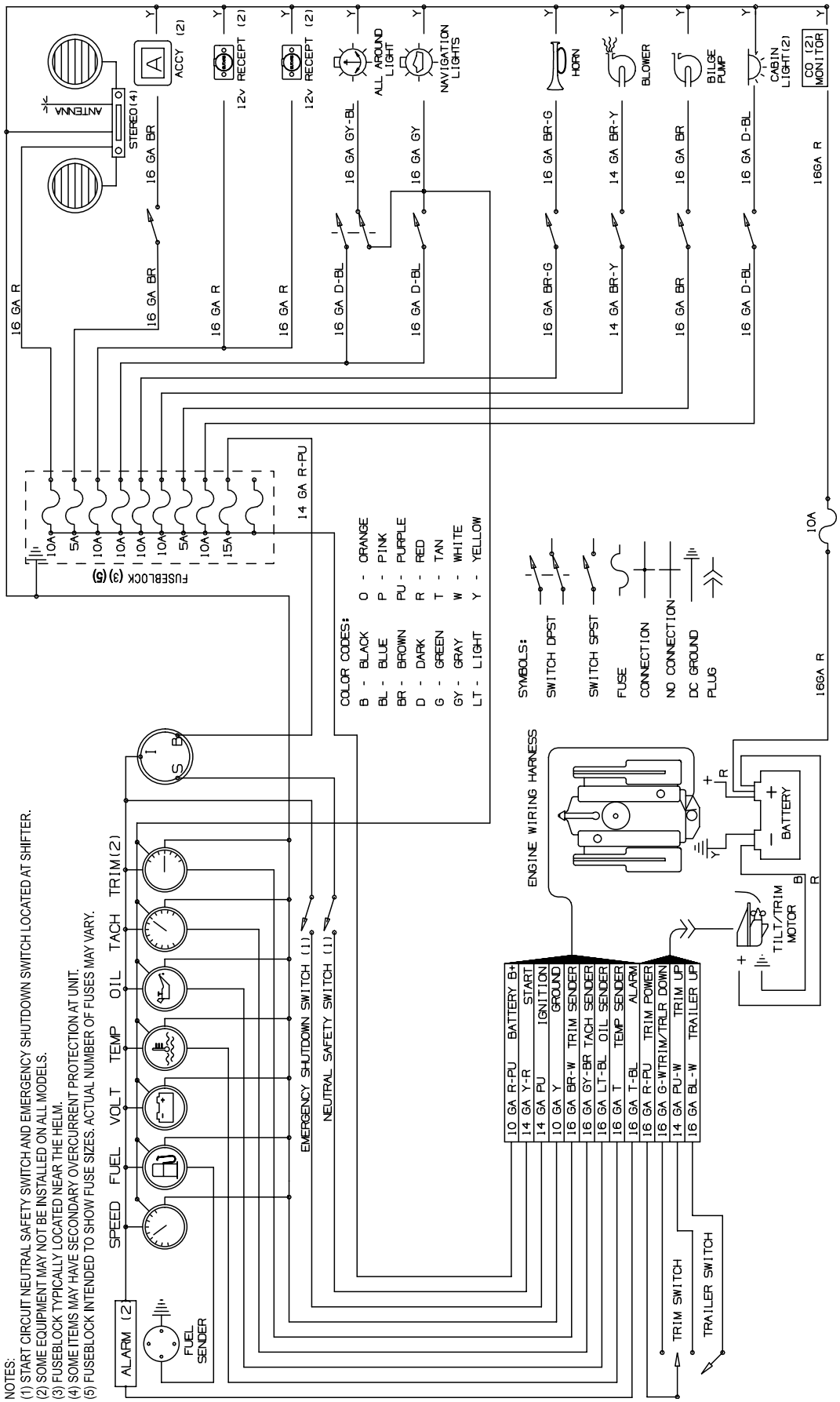

NOTES:
(1) START CIRCUIT NEUTRAL SAFETY SWITCH AND EMERGENCY SHUTDOWN SWITCH LOCATED AT SHIFTER.
(2) SOME EQUIPMENT MAY NOT BE INSTALLED ON ALL MODELS.
(3) FUSEBLOCK TYPICALLY LOCATED NEAR THE HELM.
(4) SOME ITEMS MAY HAVE SECONDARY OVERCURRENT PROTECTION AT UNIT.
(5) FUSEBLOCK INTENDED TO SHOW FUSE SIZES. ACTUAL NUMBER OF FUSES MAY VARY.

Important Records

Selling Dealer

Name Of Dealership

Address

Phone/FAX/E-mail

Sales Manager

Service Manager

Engine

Manufacturer | Model Name/Number

Engine Serial Number

Propeller

Manufacturer | Pitch

Model Number

Key Numbers

Ignition | Other

Electronics

Manufacturer | Model Name/Number

Serial Number

Manufacturer | Model Name/Number

Serial Number

Manufacturer | Model Name/Number

Serial Number

Manufacturer | Model Name/Number

Serial Number

Manufacturer | Model Name/Number

Serial Number

Float Plan

Before going boating, fill out a copy of this float plan (or similar) and leave it with a ***reliable*** person whom you can depend on to contact the Coast Guard or other rescue organization, if you do not return as scheduled.

Description of Boat

Registration/Documentation Number

Length | Make | Type

Hull Color | Trim Color

Fuel Capacity | Engine Type | Number of Engines

Distinguishing Features

Distinguishing Features

Operator of Boat

Full Name

Male or Female | Age | Health

Address

Address

Phone/FAX/E-mail

Operator's Experience

Persons Onboard

Full Name

Age | Health | Phone Number

Full Name

Age | Health | Phone Number

Full Name

Age | Health | Phone Number

Full Name

Age | Health | Phone Number

Full Name

Age | Health | Phone Number

Full Name

Age | Health | Phone Number

Full Name

Age | Health | Phone Number

Full Name

Age | Health | Phone Number

Survival Equipment

Marine Radio (Yes/No)	Type	Frequencies
Number of PFDs	Flares (Yes/No)	Mirror (Yes/No)
Smoke Signals (Yes/No)	Flashlight (Yes/No)	Food (Yes/No)
Water (Yes/No)	Anchor (Yes/No)	Raft/Dinghy (Yes/No)
Paddles (Yes/No)	EPIRB (Yes/No)	Other
Other	Other	Other

Vehicle Description

Make	Model
Color	License Number

Where is the Vehicle Parked?

Trip Expectations

Departing From

Departure Date	Departure Time

Stopover 1

Arrive No Later Than: Date	Arrive No Later Than: Time

Stopover 2

Arrive No Later Than: Date	Arrive No Later Than: Time

Stopover 3

Arrive No Later Than: Date	Arrive No Later Than: Time

Stopover 4

Arrive No Later Than: Date	Arrive No Later Than: Time

Stopover 5

Arrive No Later Than: Date	Arrive No Later Than: Time

Stopover 6

Arrive No Later Than: Date	Arrive No Later Than: Time

Final Destination Port (If Different Than Home Port)

Arrive No Later Than: Date	Arrive No Later Than: Time

If not returned by the date and time listed above, call the Coast Guard or other local authority.

Coast Guard Phone Number

Local Authority Phone Number

Owner’s Notes

Owner’s Notes

Owner’s Notes

Part Number 1810222

Bayliner • P.O. Box 9029 • Everett, WA 98206 • 360-435-5571